SERVICE MANUAL AA-2D CHASSIS

MODEL	DEST.	COMMANDER	CHASSIS NO.
KV-32S42	US	RM-Y168	SCC-S07U-A
KV-32S42	CND	RM-Y168	SCC-S08R-A
KV-32S66	US	RM-Y169	SCC-S07V-A
KV-32S66	CND	RM-Y169	SCC-S08S-A
KV-32V42	US	RM-Y168	SCC-S07W-A
KV-35S42	US	RM-Y168	SCC-S07R-A
KV-35S42	CND	RM-Y168	SCC-S07P-A
KV-35S66	US	RM-Y169	SCC-S07S-A
KV-35S66	CND	RM-Y169	SCC-S08Q-A
KV-35V42	US	RM-Y168	SCC-S07T-A

KV-35V42

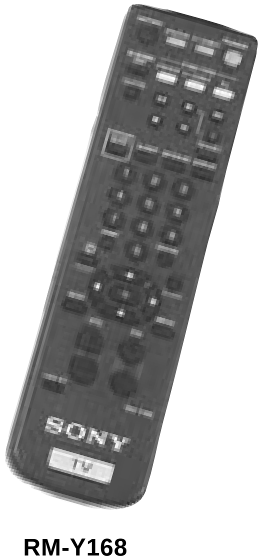

RM-Y168

TRINITRON® COLOR TV

SONY

SPECIFICATIONS

	KV-32S42	KV-32S66	KV-32V42	KV-35S42	KV-35S66	KV-35V42
Power requirements	120V,60Hz	120V,60Hz	120V,60Hz	120V,60Hz	120V,60Hz	120V,60Hz
Number of inputs/outputs						
Video [1]	1	2	3	2	2	3
S Video [2]	1	1	1	1	1	2
Audio [3]	1	2	3	2	2	3
Audio Out [4]	1	1	1	1	1	1
Monitor Out	-	-	1	-	-	1
S-Link	-	3	-	-	3	-
Speaker output(W)	5W x 2	5W x 2	5W x 2	5W x 2	5W x 2	5W x 2
Power Consumption(W) In use(Max)	180W	180W	180W	210W	210W	210W
In standby	2W	2W	2W	2W	2W	2W
Dimensions(W/H/D) (mm)	791 x 707 x 604.5mm	791 x 707 x 604.5mm	821 x 675.3 x 587 mm	870 x 761x 653 mm	870 x 761x 653 mm	920 x 730.8x 641.8 mm
(in)	31 x 27 13/16 x 23 3/4 in	31 x 27 13/16 x 23 3/4 in	32 3/8 x 26 5/8 x 23 1/8 in	34 1/4 x 30 x 25 5/8 in	34 1/4 x 30 x 25 5/8 in	36 3/4 x 28 3/4 x 25 1/4 in
Mass (kg)	65 kg	65 kg	70 kg	83 kg	83 kg	90 kg
(lbs)	143 lbs	143 lbs	154 lbs	183 lbs	183 lbs	203 lbs

1) 1 Vp-p 75 ohms unbalanced, sync negative
2) Y: 1 Vp-p 75 ohms unbalanced, sync negative
C: 0.286 Vp-p (Burst signal), 75 ohms
3) 500 mVrms (100% modulation), Impedance: 47 kilohms
4) More than 408 mVrms at the maximum volume setting (variable)
More than 408 mVrms (fix)
Impedance (output): 2 kilohms

Television system
American TV standard, NTSC

Channel coverage
VHF:2-13/UHF:14-69/CATV:1-125

Picture tube
Trinitron® tube

Visible screen size
32-inch picture measured diagonally
(KV-32S42/32S66/32V42)

35-inch picture measured diagonally
(KV-35S42/35S66/35V42)

Actual screen size
34-inch picture measured
(KV-32S42/32S66/32V42)

37-inch picture measured
(KV-35S42/35S66/35V42)

Antenna
75 ohm external terminal for VHF/UHF

Supplied Accessories
RM-Y168 (KV-32S42/32V42/35S42/35V42)
RM-Y169 (KV-32S66/35S66)
Batteries size AA (R6) (2)

Optional Assessories
A/V Cable VMC-810/820/830HG
Audio Cable RKC-515HG
S-Link Cable RK-G69HG
S Video Cable YC-15/30HG
TV Stand SU-32A4, SU-35A4

Design and specifications are subject to change without notice.

(●) SRS (SOUND RETRIEVAL SYSTEM)

The (●) SRS (SOUND RETRIEVAL SYSTEM) is manufactured by Sony Corporation under license from SRS Labs, Inc. It is covered by U.S. Patent No. 4,748,669. Other U.S. and foreign patents pending.

The word 'SRS' and the SRS symbol (●) are registered trademarks of SRS Labs, Inc.

BBE and BBE symbol are trademarks of BBE Sound, Inc. and are licensed by BBE Sound, Inc. under U.S. Patent No. 4,638,258 and 4,482,866.

TABLE OF CONTENTS

Section	Title	Page
Safety Check-Out		4
1. GENERAL		
	Connecting and Installing the TV	5
	Operating Video Equipment	7
	Operating a Cable Box or Satellite Receiver	8
	Troubleshooting	8
2. DISASSEMBLY		
2-1.	Rear Cover Removal	9
2-2.	Chassis Assembly Removal	9
2-3.	Service Position	10
2-4.	Control Switch Removal	10
2-5-1.	Picture Tube Removal (32")	11
2-5-2.	Picture Tube Removal (35")	11
3. SET-UP ADJUSTMENTS		
3-1.	Beam Landing	12
3-2.	Convergence	13
3-3.	Focus	14
3-4.	Screen (G2)	14
3-5.	White Balance Adjustments	14
4. SAFETY RELATED ADJUSTMENTS		
4-1.	⧓ R530, R531 Confirmation Method (Hold-down Confirmation and Readjustments)	15
4-2.	B+ Voltage and Confirmation Method	15
5. CIRCUIT ADJUSTMENTS		16
6. DIAGRAMS		
6-1.	Block Diagram (KV-32S42/35S42 ONLY)	23
6-2.	Block Diagram (KV-32S66/32V42/35S66/35V42 ONLY)	27
6-3.	Circuit Boards Location	34
6-4.	Printed Wiring Boards and Schematic Diagrams	34
	• A Board	35
	• AV Board	48
	• B Board	48
	• C Board	51
	• G Board	52
	• HV Board	55
	• HS Board	55
	• P Board	56
	• WB Board	57
	• WA Board	58
	• UV Board	59
6-5.	Semiconductors	63
7. EXPLODED VIEWS		
7-1.	Chassis (KV-32S42 ONLY)	64
7-2.	Chassis (KV-32S66 ONLY)	65
7-3.	Chassis (KV-32V42 ONLY)	66
7-4.	Chassis (KV-35S42 ONLY)	67
7-5.	Chassis (KV-35S66 ONLY)	68
7-6.	Chassis (KV-35V42 ONLY)	69
8. ELECTRICAL PARTS LIST		
	• Table of Contents for Parts List	70
	• Parts Listings	71

WARNINGS AND CAUTIONS

CAUTION

SHORT CIRCUIT THE ANODE OF THE PICTURE TUBE AND THE ANODE CAP TO THE METAL CHASSIS, CRT SHIELD, OR CARBON PAINTED ON THE CRT, AFTER REMOVING THE ANODE.

WARNING!!

AN ISOLATION TRANSFORMER SHOULD BE USED DURING ANY SERVICE TO AVOID POSSIBLE SHOCK HAZARD, BECAUSE OF LIVE CHASSIS. THE CHASSIS OF THIS RECEIVER IS DIRECTLY CONNECTED TO THE AC POWER LINE.

SAFETY-RELATED COMPONENT WARNING!!

COMPONENTS IDENTIFIED BY SHADING AND MARK ⚠ ON THE SCHEMATIC DIAGRAMS, EXPLODED VIEWS, AND IN THE PARTS LIST ARE CRITICAL FOR SAFE OPERATION. REPLACE THESE COMPONENTS WITH SONY PARTS WHOSE PART NUMBERS APPEAR AS SHOWN IN THIS MANUAL OR IN SUPPLEMENTS PUBLISHED BY SONY. CIRCUIT ADJUSTMENTS THAT ARE CRITICAL FOR SAFE OPERATION ARE IDENTIFIED IN THIS MANUAL. FOLLOW THESE PROCEDURES WHENEVER CRITICAL COMPONENTS ARE REPLACED OR IMPROPER OPERATION IS SUSPECTED.

ATTENTION!!

APRES AVOIR DECONNECTE LE CAP DE L'ANODE, COURT-CIRCUITER L'ANODE DU TUBE CATHODIQUE ET CELUI DE L'ANODE DU CAP AU CHASSIS METALLIQUE DE L'APPAREIL, OU AU COUCHE DE CARBONE PEINTE SUR LE TUBE CATHODIQUE OU AU BLINDAGE DU TUBE CATHODIQUE.

ATTENTION!!

AFIN D'EVITER TOUT RESQUE D'ELECTROCUTION PROVENANT D'UN CHÁSSIS SOUS TENSION, UN TRANSFORMATEUR D'ISOLEMENT DOIT ETRE UTILISÉ LORS DE TOUT DÉPANNAGE. LE CHÁSSIS DE CE RÉCEPTEUR EST DIRECTEMENT RACCORDÉ À L'ALIMENTATION SECTEUR.

ATTENTION AUX COMPOSANTS RELATIFS A LA SECURITE!!

LES COMPOSANTS IDENTIFIES PAR UNE TRAME ET PAR UNE MARQUE ⚠ SUR LES SCHEMAS DE PRINCIPE, LES VUES EXPLOSEES ET LES LISTES DE PIECES SONT D'UNEIMPORTANCE CRITIQUE POUR LA SECURITE DU FONCTIONNEMENT. NE LES REMPLACER QUE PAR DES COMPOSANTS SONY DONT LE NUMERO DE PIECE EST INDIQUE DANS LE PRESENT MANUEL OU DANS DES SUPPLEMENTS PUBLIES PAR SONY. LES REGLAGES DE CIRCUIT DONT L'IMPORTANCE EST CRITIQUE POUR LA SECURITE DU FONCTIONNEMENT SONT IDENTIFIES DANS LE PRESENT MANUEL. SUIVRE CES PROCEDURES LORS DE CHAQUE REMPLACEMENT DE COMPOSANTS CRITIQUES, OU LORSQU'UN MAUVAIS FONTIONNEMENT SUSPECTE.

SAFETY CHECK-OUT

After correcting the original service problem, perform the following safety checks before releasing the set to the customer:

1. Check the area of your repair for unsoldered or poorly soldered connections. Check the entire board surface for solder splashes and bridges.
2. Check the interboard wiring to ensure that no wires are “pinched” or touching high-wattage resistors.
3. Check that all control knobs, shields, covers, ground straps, and mounting hardware have been replaced. Be absolutely certain that you have replaced all the insulators.
4. Look for unauthorized replacement parts, particularly transistors, that were installed during a previous repair. Point them out to the customer and recommend their replacement.
5. Look for parts which, though functioning, show obvious signs of deterioration. Point them out to the customer and recommend their replacement.
6. Check the line cords for cracks and abrasion. Recommend the replacement of any such line cord to the customer.
7. Check the B+ and HV to see if they are specified values. Make sure your instruments are accurate; be suspicious of your HV meter if sets always have low HV.
8. Check the antenna terminals, metal trim, “metallized” knobs, screws, and all other exposed metal parts for AC leakage. Check leakage as described below.

Leakage Test

The AC leakage from any exposed metal part to earth ground and from all exposed metal parts to any exposed metal part having a return to chassis, must not exceed 0.5 mA (500 microamperes). Leakage current can be measured by any one of three methods.

1. A commercial leakage tester, such as the Simpson 229 or RCA WT-540A. Follow the manufacturers' instructions to use these instructions.
2. A battery-operated AC milliammeter. The Data Precision 245 digital multimeter is suitable for this job.
3. Measuring the voltage drop across a resistor by means of a VOM or battery-operated AC voltmeter. The “limit” indication is 0.75 V, so analog meters must have an accurate low voltage scale. The Simpson’s 250 and Sanwa SH-63Trd are examples of passive VOMs that are suitable. Nearly all battery-operated digital multimeters that have a 2 VAC range are suitable (see Figure A).

How to Find a Good Earth Ground

A cold-water pipe is a guaranteed earth ground. The cover-plate retaining screw on most AC outlet boxes is also at earth ground. If the retaining screw is to be used as your earth ground, verify that it is at ground by measuring the resistance between it and a cold-water pipe with an ohmmeter. The reading should be zero ohms. If a cold-water pipe is not accessible, connect a 60- to 100-watt trouble- light (not a neon lamp) between the hot side of the receptacle and the retaining screw. Try both slots, if necessary, to locate the hot side on the line; the lamp should light at normal brilliance if the screw is at ground potential (see Figure B).

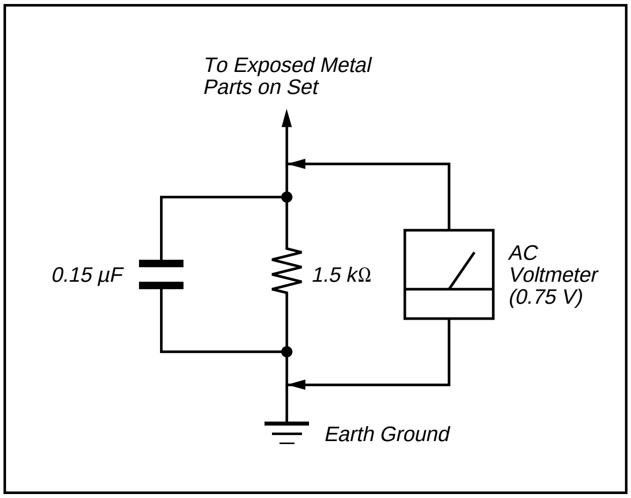

Figure A. Using an AC voltmeter to check AC leakage.

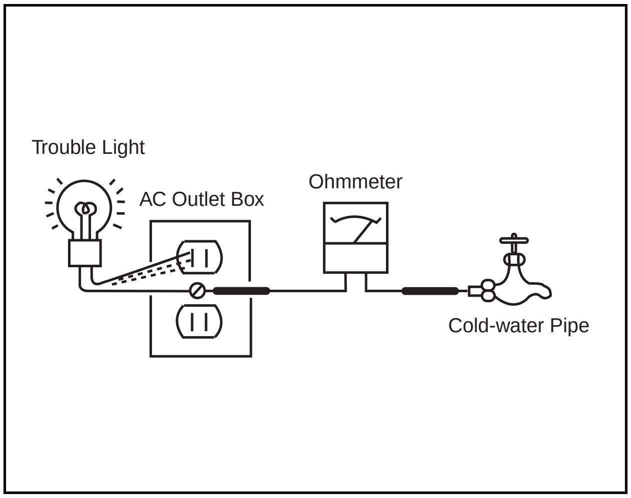

Figure B. Checking for earth ground.

SECTION 1 GENERAL

The instructions mentioned here are partial abstracts from the Operating Instruction Manual.The page numbers shown reflect those of the Operating Instruction Manual.

Welcome!

Thank you for purchasing the Sony Trinitron® Color TV. Before reading, check the model number located on the front of this manual.

The menus and illustrations used in these instructions are for KV-35S66. Differences in operation or features will be indicated in the text, for example, "KV-35S66 only."

Model Number	PICTURE IN PICTURE (PIP)	SRS	SURROUND	AUTO VOLUME CONTROL
KV-32S42			●	
KV-32S66	●		●	
KV-32V42		●		●
KV-35S42			●	
KV-35S66	●		●	
KV-35V42		●		●

Precautions

Safety

- Operate the TV only with 120 V AC .
- The plug is designed, for safety purposes, to fit in the wall outlet only one way. If you are unable to insert the plug fully into the outlet, contact your dealer.
- If any liquid or solid object should fall inside the cabinet, unplug the TV immediately and have it checked by qualified personnel before operating it further.

Installing

- To prevent internal heat build-up, do not block the ventilation openings.
- Do not install the TV in a hot or humid place, or in a place subject to excessive dust or mechanical vibration.
- The AC power cord is attached to the rear of the TV with hooks. Do not attempt to remove the cord from these hooks. Doing so could cause damage to the TV.

Using This Manual

This manual is divided into five major sections. We recommend that you review the contents before you begin to use your new TV.

1 Connecting and Installing the TV
This section guides you through your initial set up. It shows how to connect to your antenna or cable, and connect any accessories.

2 Basic Set Up
This section teaches you the basic skills needed to operate your new TV.

3 Using your New TV
This section shows the initial setup screen and how to use your remote control.

4 Using your Menus
This section teaches you how to access on-screen menus and adjust your TV's settings.

5 Troubleshooting
This section helps you to correct problems you may encounter with your TV.

Connecting and Installing the TV

Making Connections

Refer to the table below, it will direct you to the diagram suitable to the equipment you will be connecting.

If you will be connecting	See page
Cable or antenna only	3
Cable and antenna	3
Cable box	4
Cable box and cable to view scrambled channels	4
VCR and cable or antenna	5
VCR and cable box	5
Two VCRs for tape editing	6
Satellite Receiver	7
VCR and Satellite Receiver	7
DVD Player	8
Audio system	9
Camcorder to view tapes	9
VCR using S-Link	10
Satellite Receiver using S-Link	10

2

Cable or Antenna Connections

Connecting directly to cable or an antenna

The connection you choose will depend on the cable found in your home. Newer homes will be equipped with standard coaxial cable (see **A**); older homes will probably have 300-ohm twin lead cable (see **B**); still other homes may contain both (see **C**).

A
- VHF only or
- VHF/UHF or
- Cable

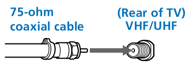

B
- VHF only or
- UHF only or
- VHF/UHF

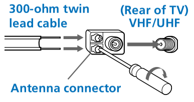

C
- VHF

and

- UHF

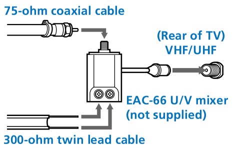

Cable and antenna

KV-32S66, 35S66 only
If your cable provider does not feature local channels, you may find this set up convenient.

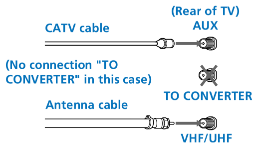

Select CABLE or antenna (ANT) mode by pressing **ANT** on the remote control.

Note
In order to receive channels with an antenna, you will need to turn your CABLE to OFF and perform the AUTO PROGRAM function, (see page 23).

3

Connecting and Installing the TV (continued)

Cable Box Connections

Some pay cable TV systems use scrambled or encoded signals that require a cable box to view all channels.

Cable box

1 Connect the coaxial connector from your cable to the IN on your cable box.
2 Using a coaxial cable, connect OUT on your cable box to VHF / UHF on your TV.

If you will be controlling all channel selection through your cable box, you should consider using the CHANNEL FIX feature, (see page 23).

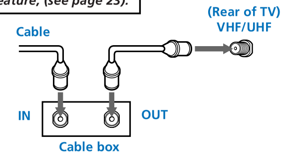

Cable box and cable

KV-32S66, 35S66 only
For this set up, you can switch between scrambled channels (through your cable box), and normal (CATV) channels by pressing **ANT** on your remote control.

Notes
- Your Sony remote control can be programmed to operate your cable box, (see page 30).
- When using PIP, you cannot view the AUX input in the window picture.

If you are connecting a cable box through the AUX input and would like to switch between the AUX and normal (CATV) input you should consider using the CHANNEL FIX feature, (see page 23).

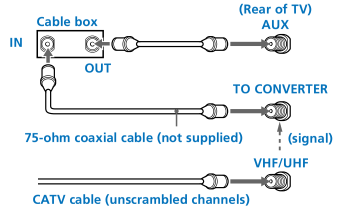

Tip
*Pressing **ANT** switches between these inputs.*

4

VCR Connections

Connecting an antenna/cable TV system with a VCR

1 Attach the coaxial connector from your cable or antenna to IN on your VCR.
2 Using A / V connectors, connect AUDIO and VIDEO OUT on your VCR to AUDIO and VIDEO IN on your TV.
3 Using a coaxial connector, connect OUT on your VCR to VHF / UHF on your TV.

Tip

If you are connecting a monaural VCR, connect only the single white audio output to the left input on your TV.

For optimum picture quality, use S VIDEO instead of the yellow A/V cable. S VIDEO does not provide sound, your audio connectors must still be connected.

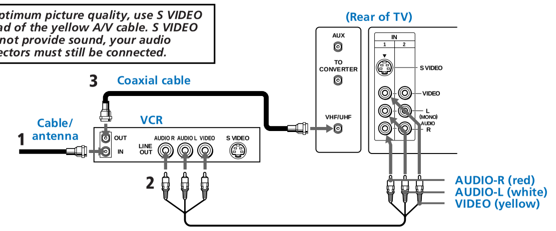

Connecting a VCR and TV with a cable box

1 Connect the coaxial cable from the wall to IN on your cable box .
2 Using a coaxial connector, connect OUT on your cable box to IN on your VCR.
3 Connect a coaxial cable (not supplied) from the OUT jack on your VCR to VHF / UHF on your TV.
4 Using A / V connectors, connect AUDIO and VIDEO OUT on your VCR to AUDIO and VIDEO IN on your TV.

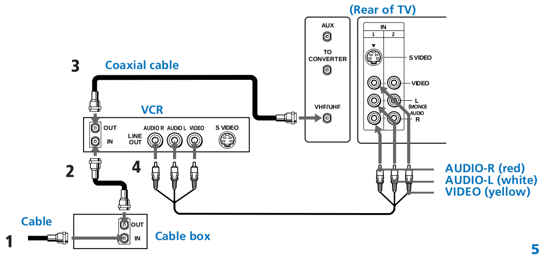

Connecting and Installing the TV (continued)

Connecting two VCRs for tape editing

KV-32V42, 35V42 only

MONITOR OUT gives you the ability to use a second VCR to record a program being played by the primary VCR or to perform tape editing and dubbing.

1 Connect the VCR intended for playback using the connection instructions on page 5 of this manual.
2 Using A / V connectors, connect AUDIO and VIDEO IN on your VCR intended for recording to MONITOR AUDIO and VIDEO OUT on your TV.

To perform tape editing; set the TV to the video input intended for playback by pressing TV/VIDEO.

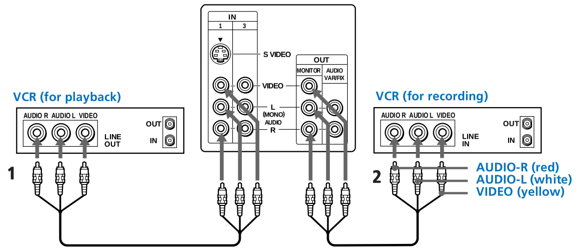

Satellite Receiver Connections

Connecting a satellite receiver

1 Connect the cable from your satellite antenna to SATELLITE IN on your receiver.
2 Attach the coaxial connector from your cable or antenna to VHF / UHF on your TV.
3 Using A / V connectors, connect AUDIO and VIDEO OUT on your receiver to AUDIO and VIDEO IN on your TV.

For optimum picture quality, use S VIDEO instead of the yellow A/V cable. S Video does not provide sound, your audio connectors must still be connected.

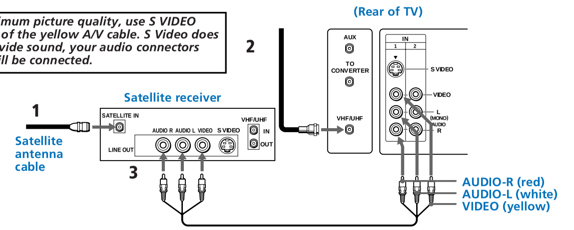

Connecting a satellite receiver and a VCR

1 Connect the cable from your satellite antenna to SATELLITE IN on your receiver.
2 Attach the coaxial connector from your cable or antenna to IN on your VCR.
3 Using a coaxial connector, connect OUT on your VCR to VHF / UHF on your TV.
4 Using A / V connectors, connect AUDIO and VIDEO OUT on your receiver to AUDIO and VIDEO IN on your VCR.
5 Using A / V connectors, connect AUDIO and VIDEO OUT on your VCR to AUDIO and VIDEO IN on your TV.

Pressing TV/VIDEO on the remote control will allow you to view from the satellite receiver or VCR.

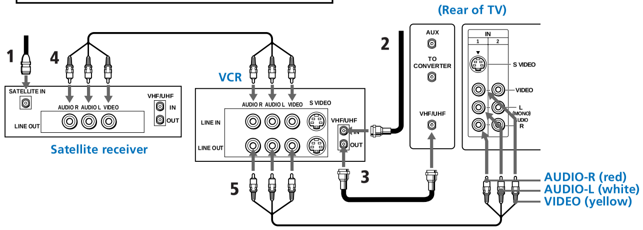

Connecting and Installing the TV (continued)

DVD Player Connections

Connecting a DVD Player

1 Using audio connectors, connect AUDIO OUT on your DVD player to AUDIO IN on your TV.
2 Using an S VIDEO cable, connect S VIDEO on your DVD player to S VIDEO on your TV.

Note

If you do not have an S Video cable, connect a yellow video cable from LINE OUT VIDEO on your DVD to VIDEO IN on your TV.

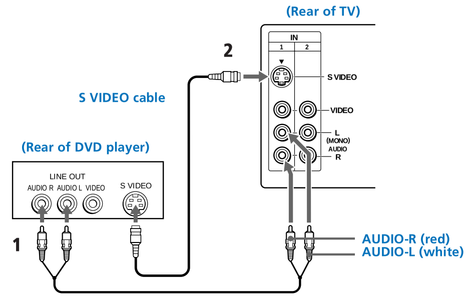

Additional Connections

Connecting an audio system

For an enhanced sound, connect your audio system to your TV.

1 Using AUDIO connectors, connect AUDIO OUT on your TV to one of the unused Line inputs (e.g. Tape-2, AUX1, etc.) on your stereo.

2 Set your stereo to the chosen Line input and use the AUDIO ♪ menu to set your audio output, (see page 19).

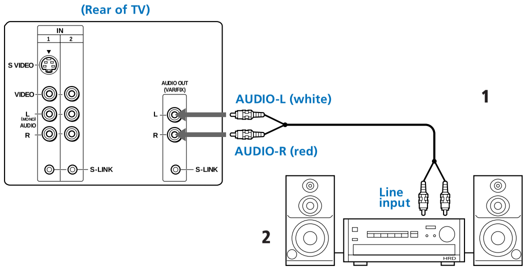

Connecting a camcorder

This connection is convenient for viewing a picture directly from your camcorder.

Using A / V connectors, connect AUDIO and VIDEO OUT on your camcorder to AUDIO and VIDEO IN on your TV.

Connection can also be made directly to the A / V input located on the the rear of the TV.

Tip

If you are connecting a monaural camcorder, connect only the single white audio output to the left input on your TV.

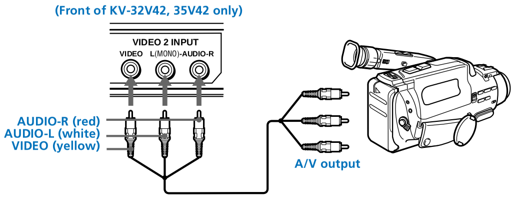

Connecting and Installing the TV (continued)

Using Special Sony Features

KV-32S66, 35S66 only

Connecting S-Link to a VCR

S-Link automatically powers on the TV and switches to the correct video input when a tape is inserted in the VCR.

1 Using A / V connectors, connect AUDIO and VIDEO OUT on your VCR to AUDIO and VIDEO IN on your TV.

2 Using an S-Link connector (mono mini plug), connect S-LINK on your VCR to S-LINK / CONTROL S-OUT in the same VIDEO IN column on your TV.

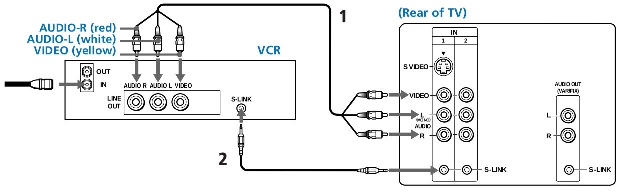

Connecting S-Link to a satellite receiver

When you power on the satellite receiver , S-Link automatically powers on the TV and switches to the correct video input.

1 Using A / V connectors, connect AUDIO and VIDEO OUT on your satellite receiver to AUDIO and VIDEO IN on your TV.

2 Using an S-Link connector (mono mini plug), connect S-LINK on your satellite receiver to S-LINK / CONTROL S-OUT in the same VIDEO IN column on your TV.

Note

The S-Link feature will override the “SKIP” VIDEO LABEL input, (see page 21).

The S-Link connector must be in the same VIDEO-IN column as the connected A/V cables.

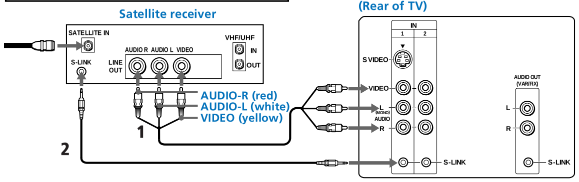

Operating Video Equipment

Programming the remote

You can use the supplied remote control to operate Sony or non-Sony video equipment.

1 Press **CODE SET**.

2 Press **VTR/DVD** (FUNCTION).

3 Use the **0-9** buttons to key in the manufacturer's code number from the following chart.

4 Press **ENTER**.

VCR code numbers

Manufacturer	Code
Sony	301, 302, 303
Admiral (M. Ward)	327
Aiwa	338, 344
Audio Dynamic	314, 337
Broksonic	319, 317
Canon	309, 308
Citizen	332
Craig	302, 332
Criterion	315
Curtis Mathes	304, 338, 309
Daewoo	341, 312, 309
DBX	314, 336, 337
Dimensia	304
Emerson	319, 320, 316, 317, 318, 341
Fisher	330, 335
Funai	338
General Electric	329, 304, 309
Go Video	322, 339, 340
Goldstar	332
Hitachi	306, 304, 305,338
Instant Replay	309, 308
JC Penney	309, 305, 304, 330, 314, 336, 337
JVC	314, 336, 337, 345, 346, 347
Kenwood	314, 336, 332, 337
LXI (Sears)	332, 305, 330, 335, 338
Magnavox	308, 309, 310
Marantz	314, 336, 337
Marta	332
Memorex	309, 335
Minolta	305, 304
Mitsubishi/MGA	323, 324, 325, 326
Multitech	325, 338, 321
NEC	314, 336, 337
Olympic	309, 308
Optimus	327
Panasonic	308, 309, 306, 307
Pentax	305, 304
Philco	308, 309
Philips	308, 309, 310
Pioneer	308
Quasar	308, 309, 306
RCA/PROSCAN	304, 305, 308, 309, 311, 312, 313, 310, 329
Realistic	309, 330, 328, 335, 324, 338
Sansui	314
Samsung	322, 313, 321
Sanyo	330, 335
Scott	312, 313, 321, 335, 323, 324, 325, 326
Sharp	327, 328
Shintom	315
Signature 2000 (M. Ward)	338, 327
SV2000	338
Sylvania	308, 309, 338, 310
Symphonic	338
Tashiro	332
Tatung	314, 336, 337
Teac	314. 336, 338, 337
Technics	309, 308
Toshiba	312, 311
Wards	327, 328, 335, 331, 332
Yamaha	314, 330, 336, 337
Zenith	331

Operating a VCR	Buttons on the remote control
To turn on or off	Press **VTR/DVD** (POWER).
To select a channel directly	Press the **0-9** buttons.
To change channels	Press **CH +/–**.
To record	Press ► and ● simultaneously.
To play	Press ►.
To stop	Press ■.
To fast forward	Press ►►.
To rewind the tape	Press ◄◄.
To pause	Press ❚❚. To resume normal playback, press again or press ►.
To scan	Press ►► or ◄◄ during playback. To resume normal playback, release the button.
To change input mode	Press **TV/VTR**.

Tips

- *In some rare cases, you may not be able to operate your non-Sony video equipment with the supplied remote control. In this case, please use the equipment's own remote control.*
- *When you remove the batteries, the code number may revert to the factory setting.*
- *The code numbers for Sony VCRs are assigned at the factory as follows:*

VHS VCR	**301** (preset code for the supplied remote control)
8 mm VCR	**302**
Beta, ED Beta VCRs	**303**

Laserdisc code numbers

Manufacturer	Code
Sony	701
Panasonic	704, 710
Pioneer	702

Operating a Laserdisc	Buttons on the remote control
To turn on or off	Press **VTR/DVD** (POWER).
To play	Press ►.
To stop	Press ■.
To pause	Press ❚❚. To resume normal playback, press again or press ►.
To scan	Press ►► or ◄◄ during playback. To resume normal playback, press ►.
To search the chapter forward or backward	Press **CH +/–**.

Tip

If you will not be programming a satellite receiver or cable box into the SAT/CABLE function of your remote, you can use it to program other video equipment (e.g. DVD, MDP, or second VCR).

DVD (Digital Versatile Disc) code numbers

Manufacturer	Code
Sony	751
Panasonic	753
Pioneer	752
RCA	755
Toshiba	754

Operating a DVD player	Buttons on the remote control
To turn on or off	Press **VTR/DVD** (POWER).
To play	Press ►.
To stop	Press ■.
To pause	Press ❚❚. To resume normal playback, press again or press ►.
To scan	Press ►► or ◄◄ during playback. To resume normal playback, press ►.
To search the chapter forward or backward	Press **CH +/–**.
To select chapters directly	**0-9** + **ENTER**.
MENU	Press to display DVD menu.
To move cursor in menu	Use your arrow buttons ⬆, ⬇, ⬅, ➡.

Operating a Cable Box or Satellite Receiver

Programming the remote control

You can program the supplied remote control to operate a cable box or satellite receiver.

1 Press **CODE SET**.
2 Press **SAT/CABLE** (FUNCTION).
3 Use the **0-9** buttons to key in the manufacturer's code number from the following chart.
4 Press **ENTER**.

For more details on operating the cable box or satellite receiver

Refer to the operating instructions that were supplied with the equipment.

If the remote control doesn't work

First, try repeating the setup procedures using the other codes listed for your equipment.

Tips

- *If more than one code number is listed, try entering them one by one until you come to the correct code for your equipment.*
- *If you enter a new code number, the code number you previously entered at that setting is erased.*
- *In some rare cases, you may not be able to operate your equipment with the supplied remote control. In this case, use the equipment's supplied remote control.*
- *Whenever you remove the batteries, the code numbers may revert to the factory setting.*

Cable box code numbers

Manufacturer	Code
Hamlin/Regal	222, 223, 224, 225, 226
Jerrold/G. I.	201, 202, 203, 204, 205, 206, 207, 208, 218
Oak	227, 228, 229
Panasonic	219, 220, 221
Pioneer	214, 215
Scientific Atlanta	209, 210, 211
Tocom	216, 217
Zenith	212, 213

Satellite receiver code numbers

Manufacturer	Code
Sony	801 (preset code for remote control)
General Electric	802
Hitachi	805
Hughes	804
Panasonic	803
RCA/PROSCAN	802, 808
Toshiba	806, 807

Troubleshooting

Consult the table below; it suggests solutions to specific problems.

Problem	What it could be	What you can do
You want to restore the TV's factory settings		• First, turn the TV on. Then while pressing the **RESET** button on the remote control, press the POWER button on the TV. The TV will turn itself off and then back on. When the TV turns on again, all settings will be reset, and the initial setup screen will appear.
A red light keeps flashing on the TV for more than a few seconds	• Your TV may need service.	• Call your local Sony service center.
TV makes a noise when turned on	• This is a normal function of your TV.	
Screen is not lit and there is no sound	• Power cord may not be plugged in. • Remote control batteries may not be inserted correctly. • TV/VIDEO setting may be incorrect. • Current program may exceed PARENTAL CONTROL settings.	• Check your power cord. • Re-insert the batteries in your remote control. • Press **TV/VIDEO** until you receive a channel. • Check your PARENTAL CONTROL settings, (page 27).
Poor or no picture (screen lit), good sound	• VIDEO menu settings may not be adjusted correctly. • Antenna/cable connections may be faulty. • VIDEO LABEL inputs may be set to WEB. (This label darkens the screen for ideal WebTV viewing)	• Readjust your VIDEO menu settings, (page 18). • Check your VIDEO LABEL settings, (page 21).
Good picture, no sound	• Sound may be set to MUTING. • Your TV may be set to SAP. • SPEAKER may not be set correctly.	• Press **MUTING**. • Check the MTS setting in the AUDIO menu, (page 19). • Check your SPEAKER settings, (page 19).
No color	• Color settings may not be adjusted correctly.	• Adjust the COLOR settings in the VIDEO menu, (page 18).
Only snow and noise appear on the screen	• CABLE may not be set correctly in the CHANNEL SET UP menu. • Antenna/cable connections may not be correct. • TV may be set to AUX mode.	• Ensure that you have selected the correct CABLE mode in the CHANNEL SET UP menu, (page 23). • Press **ANT** on your remote control to change the input mode, (page 14).

Problem	What it could be	What you can do
Cannot receive upper channels (UHF) when using an antenna	• CABLE setting may not be correct in the CHANNEL SET UP menu.	• Ensure that CABLE is set to OFF in the CHANNEL SET UP menu, (page 23). • Use AUTO PROGRAM to add receivable channels that are not presently in TV memory, (page 23).
Cannot receive any channels when using cable	• CABLE setting may not be correct in the CHANNEL SET UP menu.	• Ensure that CABLE is set to OFF in the CHANNEL SET UP menu, (page 23). • Use AUTO PROGRAM to add receivable channels that are not presently in TV memory, (page 23).
Cannot gain enough volume when using a cable box	• Volume may not be adjusted on your cable box.	• Use the remote control supplied with the cable box.
TV is fixed to one channel	• CHANNEL FIX settings may not be correct.	• Check your CHANNEL FIX settings, (page 23).
Lost password for PARENTAL CONTROL		• In the password screen, enter the following master password: 4357. The master password cannot be used to unlock currently blocked channels.

If, after reading these operating instructions, you have additional questions related to the use of your Sony television, please call our Direct Response Center at 1-800-222-SONY (7669)(U.S. residents only) or (416) 499-SONY (7669)(Canadian residents only).

SECTION 2
DISASSEMBLY

2-1. REAR COVER REMOVAL

(KV-32S42/32V42/32S66)

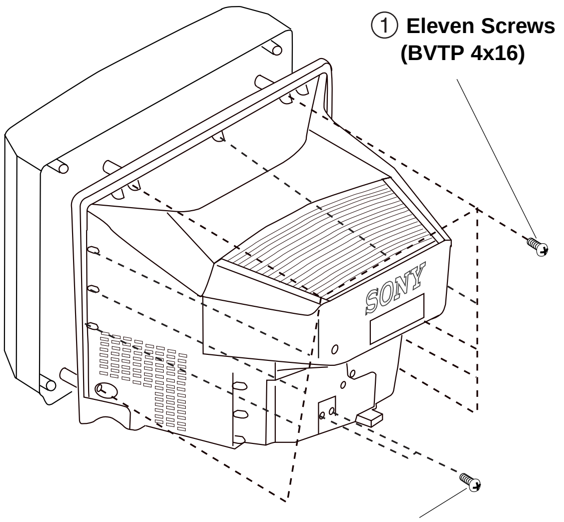

(KV-35S42/35V42/35S66)

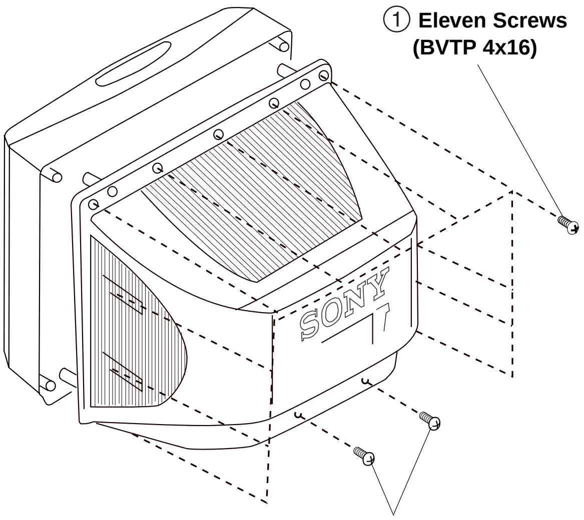

2-2. CHASSIS ASSEMBLY REMOVAL

(KV-32S42/35S42)

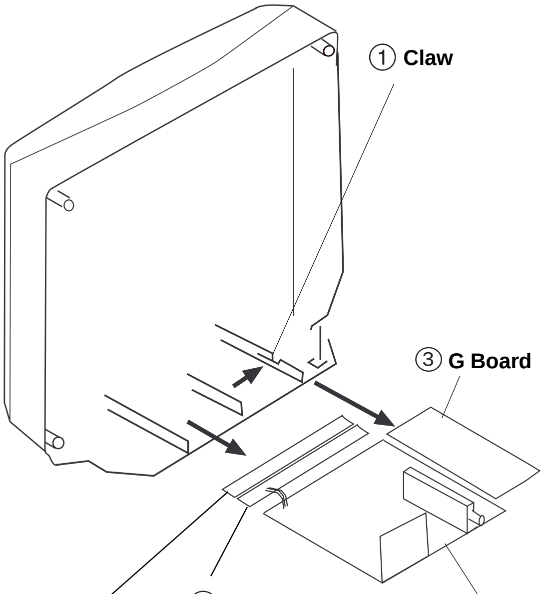

(KV-32S66/32V42/35S66/35V42)

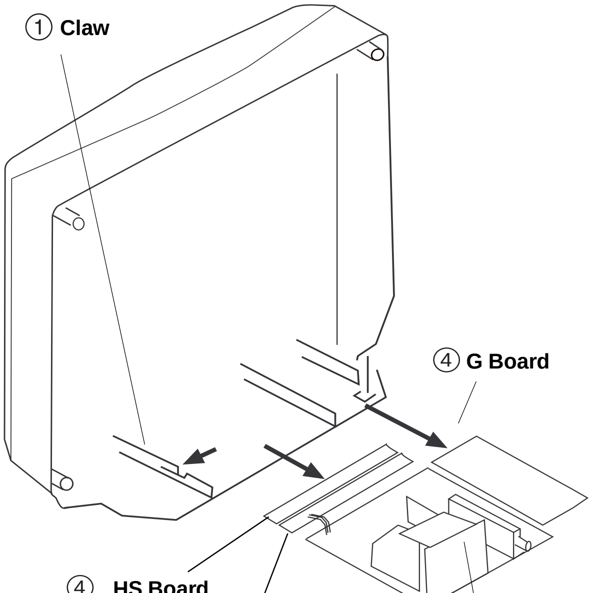

2-3. SERVICE POSITION

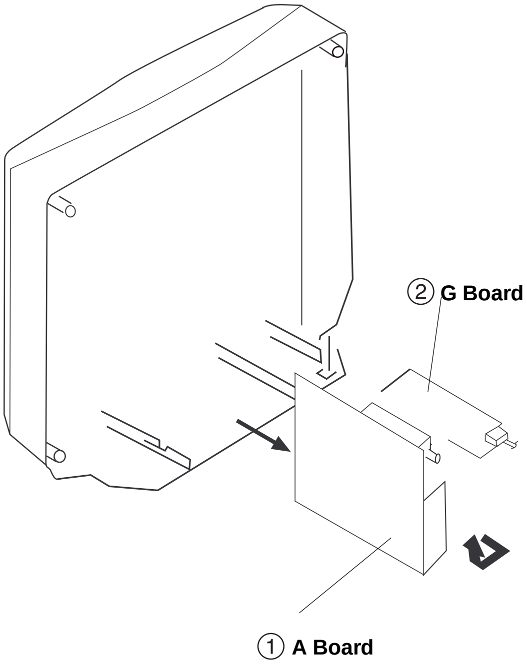

2-4. CONTROL SWITCH REMOVAL
(KV-32V42/35V42 only)

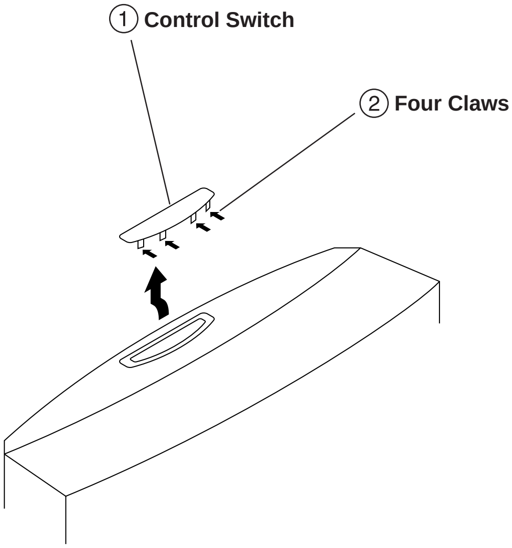

ANODE CAP REMOVAL

WARNING: High voltage remains in the CRT even after the power is disconnected. To avoid electrical shock, discharge the CRT **before** attempting to remove the anode cap. Short between anode and coated earth ground strap of CRT.

NOTE: After removing the anode, short circuit the anode of the picture tube and the anode cap to either the metal chassis, CRT shield, or carbon painted on the CRT.

REMOVAL PROCEDURES

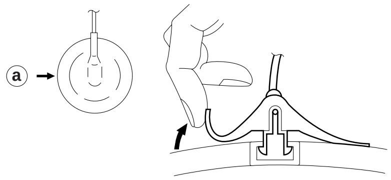

① Turn up one side of the rubber cap in the direction indicated by arrow ⓐ.

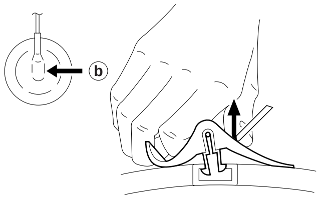

② Use your thumb to pull the rubber cap firmly in the direction indicated by arrow ⓑ.

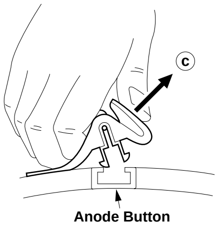

③ When one side of the rubber cap separates from the anode button, the anode cap can be removed by turning the rubber cap and pulling it in the direction of arrow ⓒ.

HOW TO HANDLE AN ANODE CAP

① Do not use sharp objects which may cause damage to the surface of the anode cap.

② To avoid damaging the anode cap, do not squeeze the rubber covering too hard. A material fitting called a shatter-hook terminal is built into the rubber.

③ Do not force turn the foot of the rubber cover. This may cause the shatter-hook terminal to protrude and damage the rubber.

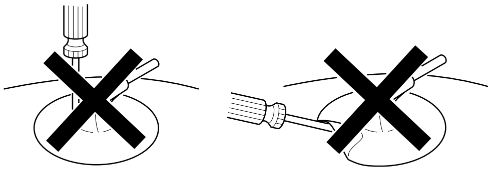

2-5-1. PICTURE TUBE REMOVAL (KV-32S42/32V42/32S66)

**WARNING:
BEFORE REMOVING
THE ANODE CAP**

High voltage remains in the CRT even after the power is disconnected. To avoid electric shock, discharge CRT ***before*** attempting to remove the anode cap. Short between anode and CRT coated earth ground strap.

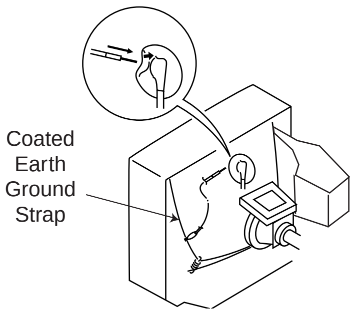

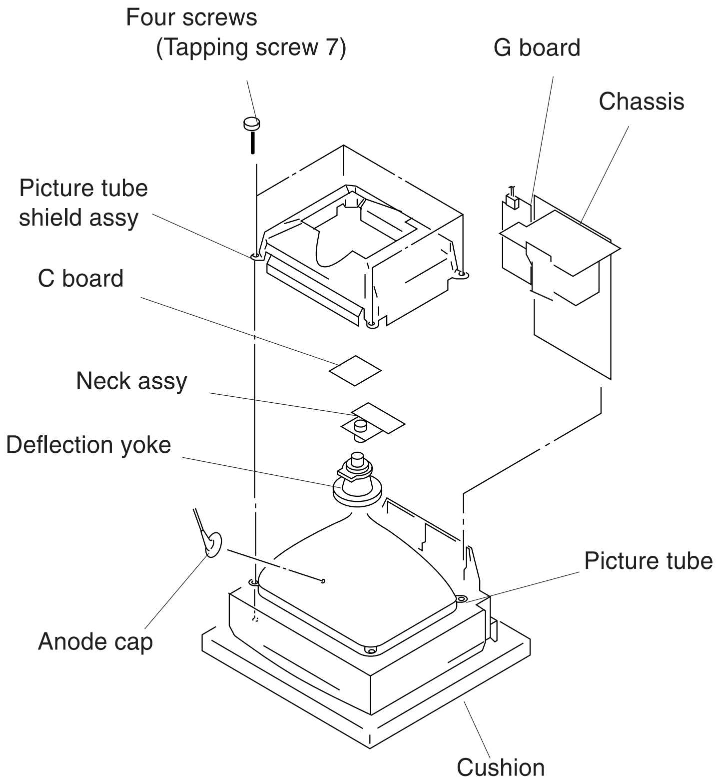

2-5-2. PICTURE TUBE REMOVAL (KV-35S42/35V42/35S66)

**WARNING:
BEFORE REMOVING
THE ANODE CAP**

High voltage remains in the CRT even after the power is disconnected. To avoid electric shock, discharge CRT ***before*** attempting to remove the anode cap. Short between anode and CRT coated earth ground strap.

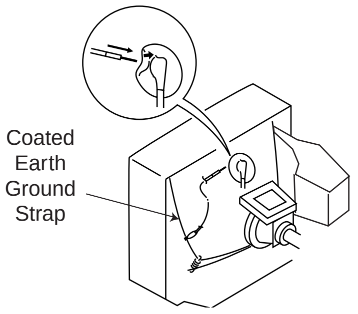

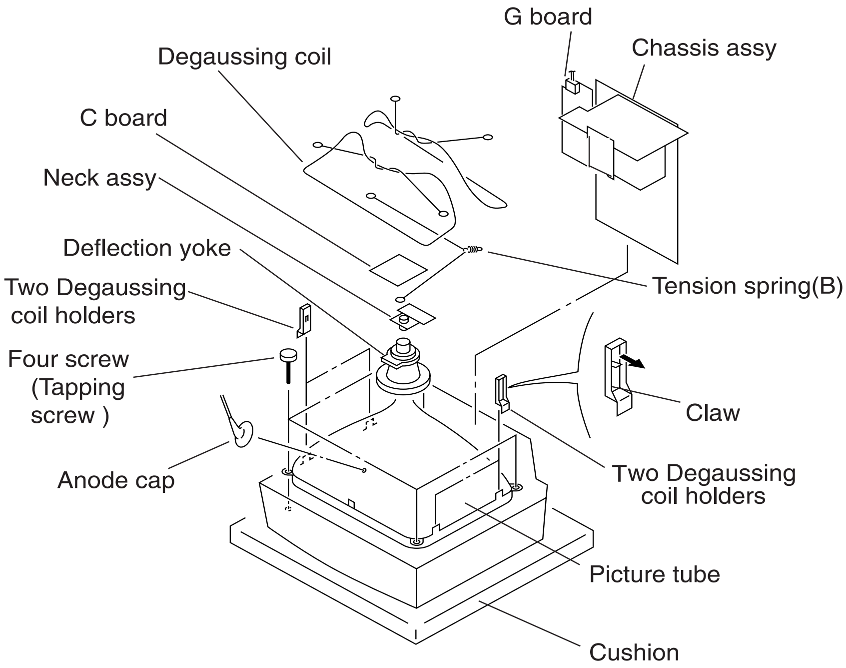

SECTION 3
SET-UP ADJUSTMENTS

The following adjustments should be made when a complete realignment is required or a new picture tube is installed.

These adjustments should be performed with rated power supply voltage unless otherwise noted.

The controls and switch should be set as follows unless otherwise noted:

PICTURE control .... normal
BRIGHTNESS control .... normal

Perform the adjustments in order as follows:

1. Beam Landing
2. Convergence
3. Focus
4. Screen (G2)/White Balance

Note: Test Equipment Required
1. Color Bar Pattern Generator
2. Degausser
3. DC Power Supply
4. Digital Multimeter

3-1. BEAM LANDING

Preparation:

- Input a white pattern signal.
- Face the picture tube in an East or West direction to reduce the influence of geomagnetism.

NOTE: Do not use the hand degausser because it magnetizes the CRT .

1. Input white pattern from pattern generator.
2. Loosen the deflection yoke mounting screw, and set the purity control to the center as shown below:

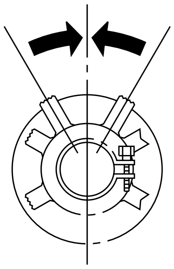

3. Input green pattern from pattern generator.
4. Move the deflection yoke backward, and adjust with the purity control so that green is in the center and red and blue are even on both sides.

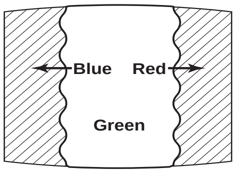

5. Move the deflection yoke forward, and adjust so that the entire screen becomes green.

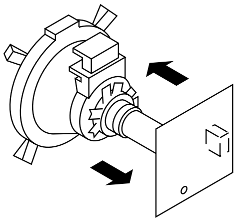

6. Switch over the raster signal to red and blue and confirm the condition.
7. When the position of the deflection yoke is determined, tighten it with the deflection yoke mounting screw.
8. When landing at the corner is not right, adjust by using the disk magnets.

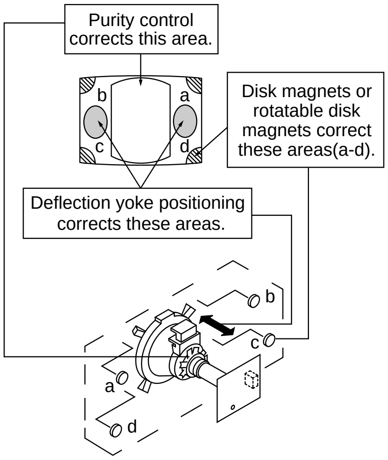

3-2. CONVERGENCE

Before starting convergence adjustments:

1. Perform FOCUS, V. LIN and V. SIZE adjustments.
2. Set BRIGHTNESS control to minimum.
3. Input dot pattern.

Vertical and Horizontal Static Convergence

1. Adjust V. STAT magnet to converge red, green and blue dots in the center of the screen. (Vertical movement)

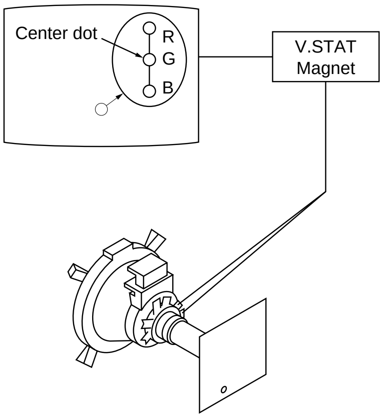

Tilt the V. STAT magnet and adjust static convergence to open or close the V. STAT magnet.

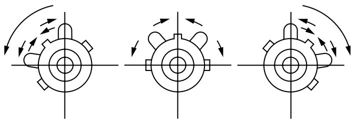

2. When the V. STAT magnet is moved in the direction of arrow a and b, red, green, and blue dots move as shown below:

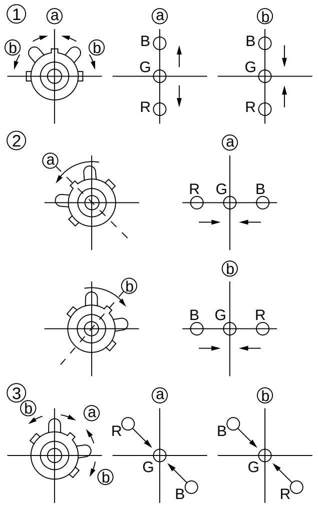

Operation of BMC (Hexapole) Magnet

The respective dot positions resulting from moving each magnet interact, so perform adjustment while tracking.

Use the VSTAT tabs to adjust the red, green, and blue dots so they line up at the center of the screen (move the dots in a horizontal direction.)

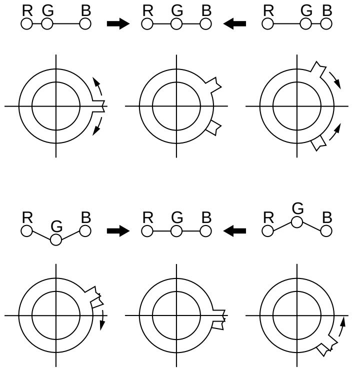

Y Separation Axis Correction Magnet Adjustment

1. Input cross-hatch pattern, adjust PICTURE to minimum and BRIGHTNESS to normal.
2. Adjust the deflection yoke upright so it touches the CRT.
3. Adjust so that the Y separation axis correction magnet on the neck assembly is symmetrical from top to bottom (open state).

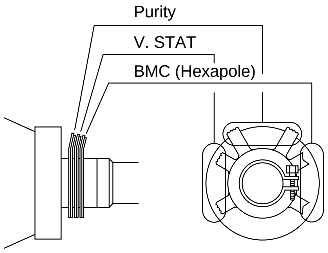

4. Return the deflection yoke to its original position.

Dynamic Convergence Adjustment

Before starting, perform Horizontal and Vertical Static Convergence Adjustment.

1. Slightly loosen deflection yoke screw.
2. Remove deflection yoke spacers.
3. Move the deflection yoke for best convergence as shown below:

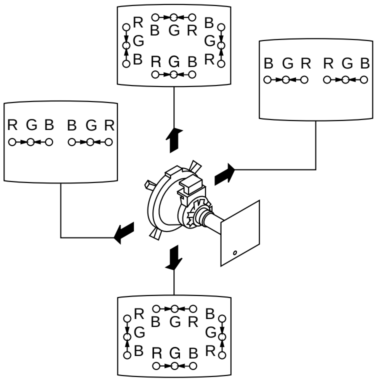

4. Tighten the deflection yoke screw.
5. Install the deflection yoke spacers.

Screen-corner Convergence

Affix a permalloy assembly corresponding to the misconverged areas:

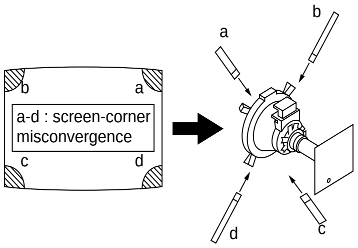

3-3. FOCUS

Adjust FOCUS control for best picture.

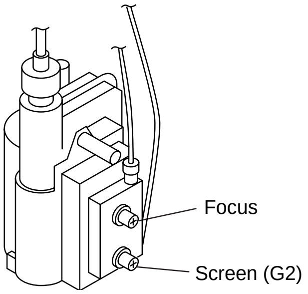

3-4. SCREEN (G2)

1. Input dot pattern from the pattern generator.
2. Set the PICTURE and BRIGHT controls at normal.
3. Adjust S BRT, G CUT, B CUT in service mode with an oscilloscope so that voltages on the red, green, and blue cathodes are 170Vdc ± 2.0Vdc for 35" and 180Vdc ± 2.0Vdc for 32".
4. Observe the screen and adjust SCREEN (G2) VR to obtain the faintly visible background of dot signal.

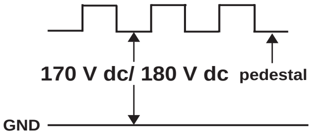

3-5. WHITE BALANCE ADJUSTMENTS

NO.	Disp.	Item	Avg/32"	Avg/35"
16	GDRV	Green Drive	33	45
17	BDRV	Blue Drive	33	45
18	GCUT	Green Cut-off	3	6
19	BCUT	Blue Cut-off	2	6
23	SBRT	Sub Bright	14	10

1. Input an entire white signal.
2. Set to Service adjustment Mode.
3. Set DCOL to "0"
4. Set the PICTURE and BRIGHT to minimum.
5. Adjust with SBRT if necessary.
6. Select GCUT and BCUT with 1 and 4 .
7. Adjust with 3 and 6 for the best white balance.
8. Set the PICTURE and BRIGHT to maximum.
9. Select GDRV and BDRV with 1 and 4 .
10. Adjust with 3 and 6 for the best white balance.
11. Reset DCOL to "1".
12. Write into the memory by pressing [MUTING] then [ENTER] **.

SECTION 4
SAFETY RELATED ADJUSTMENTS

4-1. ⧓ R530, R531 CONFIRMATION METHOD (HOLD-DOWN CONFIRMATION) AND READJUSTMENTS

Always perform the following adjustments when replacing the following components marked with a ◪ mark on the schematic diagram:

A BOARD:	IC351, IC501, D519, D520, D521, C531, C532, R387, R529, R530, R531, R532, R533, R550, T503

G BOARD:	IC643, R661

Step 1 Preparation before Confirmation

Turn the POWER switch ON.

Input a white signal and set the PICTURE and BRIGHT controls to maximum.

Confirm that the voltage of more than 18.0 VDC appears between TP85 and ground on the A Board at AC Input: 120.0 ± 0.2 VAC.

Step 2

Input a white signal and verify that I ABL is within the specified range: 2160 ± 100 µA (KV-35S42/S66/V42) or 2000 ± 100 µA (KV-32S42/S66/V42).

At AC input: 120.0 ± 2.0 VAC

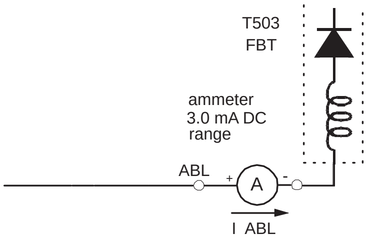

Step 3

Record the voltage between TP85 and ground.

Step 4

Using an external DC power supply, apply voltage between TP85 and ground.

Increase the voltage gradually and confirm that the holdown works (raster disappears) at lower than the voltage recorded in Step 3.

Lower than 22.05 +0.0/-0.1 VDC (KV-35S42/S66/V42)
or 26.95 +0.0/-0.1 VDC (KV-32S42/S66/V42)
at AC input: 120.0 ± 2.0 VAC.

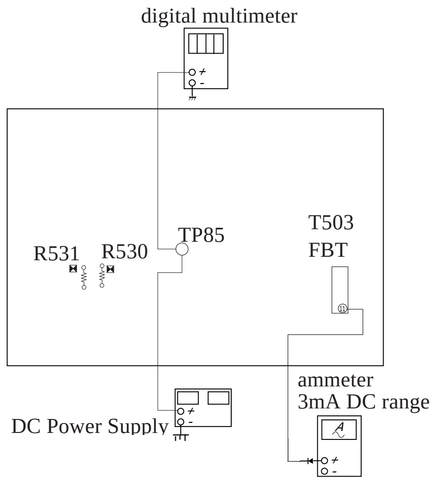

A BOARD - CONDUCTOR SIDE

Step 5

Confirm that a voltage of more than
18.0 VDC (KV-35S42/S66/V42)
or 21.5 VDC (KV-32S42/S66/V42)
appears between TP85 and ground at AC input:
120.0 ± 2.0 VAC

4-2. B+ VOLTAGE CONFIRMATION AND ADJUSTMENT

Always perform the following adjustments when replacing the following components marked with ◪ on the schematic diagram:

G BOARD:	IC643, R661

1. Using a Variac, apply AC input voltage: 130 ± 2.0 VAC
2. Input a monoscope signal.
3. Set the PICTURE control and the BRIGHT control to initial reset value.
4. Confirm the voltage of G BOARD CN641 between pin①to ground is less than 136.5 VDC.
5. If step 4 is not satisfied, replace the R661and repeat the above steps.

SECTION 5
CIRCUIT ADJUSTMENTS

ELECTRICAL ADJUSTMENTS BY REMOTE COMMANDER

Use the Remote Commander (RM-Y168) to perform the circuit adjustments in this section.

NOTE: Test Equipment Required:
- Pattern generator
- Frequency counter
- Digital multimeter
- Audio oscillator

5-1. Setting the Service Adjustment Mode

1. Standby mode. (Power off)
2. [Display] ➡ Channel [5] ➡ Sound volume [+] ➡ Power on the Remote Commander. (Press each button within a second.)

Service Adjustment Mode In

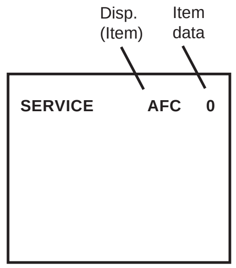

3. The CRT displays the item being adjusted.
4. Press [1] or [4] on the Remote Commander to select the item.
5. Press [3] or [6] on the Remote Commander to change the data.
6. Press [MUTING] then [ENTER] to write into memory**.

Service Adjustment Mode Memory

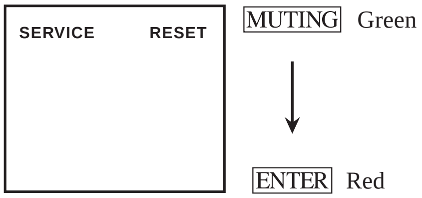

7. Press [8] then [ENTER] on the Remote Commander to initialize.

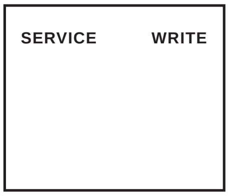

Carry out step 7 when adjusting IDs 0 to 4 and when replacing and adjusting IC002.

8. Turn set off and on to exit. * CAUTION: Wait at least 10 seconds before turning off set.

5-2. Memory Write Confirmation Method

1. After adjustment, pull out the plug from the AC outlet, then replace the plug in the AC outlet again.
2. Turn the power switch ON and set to Service Mode.
3. Call the adjusted items again to confirm they were adjusted.

5-3. Adjust Buttons and Indicator

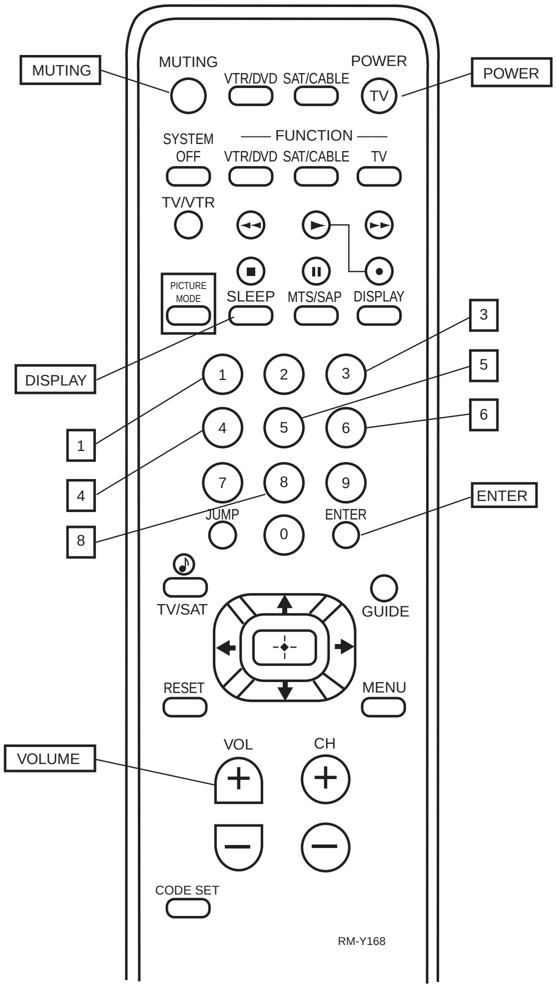

RM-Y168

**WARNING: Do NOT turn off the power or AC immediately after pressing [MUTING] then [ENTER]. Wait at least 10 seconds.

5-4. Adjustment Items

No.	Register Name	Description	Data Range	Adj/Fix	Initial Data	Average Data** 32" A,C	32" D	35" G	35" I	35" L	Comments
		VP CXA2095S									
1	VPOS	V-Position	0-63	*Adj*	20	23		33			0:Down, 63:Up
2	VSIZ	V-Size	0-63	*Adj*	20	27		52			0:Min, 63:Max
3	VCOM	V-Compensation	0-3	Fix	1	1					0:Min, 3:Max
4	VLIN	V-Linearity	0-15	*Adj*	7	9					0:Min, 15:Max
5	VSCO	S-Correction	0-15	*Adj*	7	6		9			0:Min, 15:Max
6	HPOS	H-Position	0-15	*Adj*	7	11		10			0:Right, 15:Left
7	HSIZ	H-Size	0-63	*Adj*	20	23		39			0:Min, 63:Max
8	PAMP	Pin Compensation	0-63	*Adj*	31	27		19			0:Min, 63:Max
9	UPIN	Upper Corner Pin	0-15	*Adj*	7	4		7			0:Min, 15:Max
10	LPIN	Lower Corner Pin	0-15	*Adj*	7	6		10			0:Min, 15:Max
11	PPHA	Pin Phase	0-15	*Adj*	7	4		5			0:Min(small picture), 15:Max
12	AFC	AFC	0-3	Fix	2	2					0:Freerun, 1:Min, 3:Max
13	VBOW	AFC Bow	0-15	*Adj*	7	6		5			0:Right, 15:Left
14	VANG	AFC Angle	0-15	*Adj*	7	6		4			0:Right, 15:Left
15	REF	Reference Line	0-3	Fix	2	2					0:22H(Rch), 3:16H(Rch)
16	GDRV	Green Drive	0-63	*Adj*	31	22		35			0:Min, 63:Max
17	BDRV	Blue Drive	0-63	*Adj*	31	30		26			0:Min, 63:Max
18	GCUT	Green Cutoff	0-15	*Adj*	7	5		8			0:Min, 15:Max
19	BCUT	Blue Cutoff	0-15	*Adj*	7	7		6			0:Min, 15:Max
20	SCON	Sub Contrast	0-15	*Adj*	7	10		8			0:Min, 15:Max
21	SHUE	Sub Hue (RF only)	0-15	*Adj*	7	7(adjust flat - 1 step)					0:+10deg, 15:-10deg
22	1SHU	Sub Hue (composite & S-video)	0-15	*Adj*	7	7 (same as SHUE adjusted value)					0:+10deg, 15:-10deg
23	SCOL	Sub Color (RF only)	0-15	*Adj*	7	11 (adjust flat + 2 steps)					0:Min, 15:Max
24	1SCO	Sub Color (composite & S-video)	0-15	*Adj*	7	9 (SCOL adjusted flat, no offset)					0:Min, 15:Max
25	SBRT	Sub Brightness	0-63	*Adj*	31	26					0:Min, 63:Max
26	SSHP	Sub Sharpness (RF & Composite video)	0-15	Fix by model	7	10		10			0:Min, 15:Max
27	1SSP	Sub Sharpness (S-video only)	0-15	Fix by model	7	10		10			0:Min, 15:Max
28	GMMA	Gamma Correction	0-3	Fix by model	1	0		0			0:Off, 1:Min, 3:Max
29	CDM2	Countdown Mode 2	0-1	Fix	0	0					0: Normal 1: High Speed Countdown Response
30	EYSW	External Y Switch	0-1	Fix	0	0					0: Normal 1: EYin disabled
31	DPIX	Dynamic Picture	0,1	Fix	1	1					0:Off, 1:On
32	Y-DC	DC Transmission Ratio	0,1	Fix	1	1					0:100%, 1:82%
33	ABLM	ABL Mode	0,1	Fix	1	1					0:PictureABL, 1:Picture/BrightnessABL
34	AXIS	Color Demodulation Axis	0,1	Fix	1	0					0:Japan, 1:US
35	NOTC	Chroma Trap Filter	0,1	Fix	0	0					0:Off, 1:On
36	CROM	Chroma Trap Adjust	0-15	Fix	7	7					0:+300kHz, 1:-300kHz
37	TOT	TOT Filter (RF only)	0,1	Fix	1	1					0:Off, 1:On
38	1TOT	TOT Filter (Composite & S-video)	0,1	Fix	1	0					0:Off, 1:On
39	PREL	Pre/Overshoot Ratio (RF & Composite)	0-3	Fix by model	3	1					0: 2:1, 3: 5:1
40	1PRE	Pre/Overshoot Ratio (S-video only)	0-3	Fix by model	3	3					0: 2:1, 3: 5:1
41	SHPF	Sharpness fo (RF & Composite)	0-3	Fix by model	2	1					0:2.5MHz, 3:4.0MHz
42	1SPF	Sharpness fo (S-video only)	0-3	Fix by model	2	3					0:2.5MHz, 3:4.0MHz
43	RON	Red Off	0,1	Fix	1	1					0:Off, 1:On
44	GON	Green Off	0,1	Fix	1	1					0:Off, 1:On
45	BON	Blue Off	0,1	Fix	1	1					0:Off, 1:On
46	DCOL	Dynamic Color	0,1	Fix	0	1 (adjusted @ 0, but shipped as 1)					0:Off, 1:On
47	CDMD	V Countdown Mode	0,1	Fix	0	0					0:Auto, 1:Fix
48	HBSW	H Blanking Switch	0,1	Fix	0	0					0:Off, 1:On
49	LBLK	Left Blanking	0-15	Fix	0	7					0:Min, 15:Max
50	RBLK	Right Blanking	0-15	Fix	0	7					0:Min, 15:Max
		AP CXA2021									
51	SVOL	Sub Volume	0-15	Fix	0	6					0:-0 Volume steps, 15:-15 Volume steps
52	SBAL	Sub Balance	0-15	Fix	7	7					0: +Right, 15:+Left
53	SBAS	Sub Bass	0-15	Fix by model	7	8	7	8		10	0:-7 Steps, 15: +8 steps
54	STRE	Sub Treble	0-15	Fix by model	7	10	7	10		7	0:-7 Steps, 15: +8 steps
		MM1311/1313									
55	AUSW	Audio Att Sw	0,1	Fix	1	1					0:-6dB, 1:0dB (Only for VIDEO input)

AVERAGE DATA MODEL GROUPINGS:

32"	35"
A: KV-32S42	G: KV-35S42
C: KV-32S66	I: KV-35S66
D: KV-32V42	L: KV-35V42

Adjustment Items (cont.)

No.	Register Name	Description	Data Range	Adj/Fix	Initial Data	Average Data** (32": A,C / D; 35": G / I / L)	Comments
		PI SDA9288					
56	PYSD	Select Delay	0-15	Fix by P-bd		3	0:Right, 15:Left
57	PIPH	PIP H-position	0-127	Fix	78	78	0:Right, 127:Left
58	PIPV	PIP V-position	0-63	Fix	18	18	0:Up, 63:Down
59	PYDL	PIP Y-delay	0-7	Fix	0	0	0:Right, 7:Left
60	PHDL	H-pulse delay	0-15	Fix by P-bd	3	0	0:Right, 15:Left
61	PMVD	Main V-pulse delay	0-31	Fix	16	16	7-21: Available (1-6/22-31 Not Avail)
62	PIVD	Inset V-pulse delay	0-31	Fix	22	22	16-28 Available (1-15/29-31 Not Avail)
63	PCON	Inset Contrast	0-15	Fix	7	6	0:Min, 15:Max
64	FRMY	Frame Y	0-15	Fix	7	7	0:Dark, 15:Bright
65	CHRI	Input Polarity	0,1	Fix by P-bd	1	1	0:+(B-Y)+(R-Y), 1:-(B-Y)-(R-Y)
66	CHRO	Output Polarity	0,1	Fix	1	1	0:+(B-Y)+(R-Y), 1:-(B-Y)-(R-Y)
67	IPER	Inset Pedestal R-Y	0-15	Fix	0	0	0:Center, 7:Max, 8:Min
68	IPEB	Inset Pedestal B-Y	0-15	Fix	0	0	0:Center, 7:Max, 8:Min
69	PCPS	CLPS Bit Control	0,1	Fix	0	0	0:Depend on HSIDEL, 1:Not depend
70	PCPF	CLPFIX Bit Control	0,1	Fix	0	0	0: 3Clamp line, 1: 2Clamp line
71	PSEL	SELDOWN Bit Control	0,1	Fix by P-bd	1	1	0:Open out, 1:TTL out
72	PPLL	PLL Filter Bits	0-3	Fix	0	0	Fixed value only
73	PVNR	VSPISQ VSP NR	0-1	Fix	0	1	SDA9288 IC bypass use 1
		IC CXA2019					
74	ISCO	CDec Sub Contrast	0-15	Fix	7	15	PiP sub contrast
75	ISHP	CDec Sharpness	0-15	Fix	7	8	PiP sharpness
76	ISCL	CDec Sub Color	0-15	Fix	7	9	PiP sub color
77	ISHU	CDec Sub Hue	0-15	Fix	7	6	PiP sub hue
78	ITOT	CDec TOT on	0,1	Fix	0	1	PiP TOT 0:Off, 1:On
79	IAFC	CDec AFC	0-3	Fix	2	2	0:Max, 2:Min, 3:Freerun
80	ICD2	CDec Countdown Mode2	0,1	Fix	0	0	0:Standard, 1:Fast
81	IYDR	CDec Y drive	0-31	Fix	15	7	PiP Y-drive gain
82	IVPE	CDec V pedestal	0-15	Fix	7	6	PiP V-ped DC
83	IUPE	CDec U pedestal	0-15	Fix	7	6	PiP U-ped DC
84	IRVP	CDec RV pedestal	0-15	Fix	7	6	PiP V-ped DC (re-input)
85	IRUP	CDec RU pedestal	0-15	Fix	7	6	PiP U-ped DC (re-input)
86	IDCT	CDec DC transfer	0-7	Fix	2	0	PiP DC transfer 0:Max, 7:Min
87	IRYD	CDec RY drive	0-31	Fix	15	20	PiP RY Drive (re-input)
88	IABO	CDec ABL off	0,1	Fix	1	1	PiP ABL (RY-OUT) 0:On, 1:Off
89	IPRE	CDec Pre/Over shoot	0-3	Fix	3	3	PiP Pre/over shoot 0: 1:1, 1: 4:1
90	IRUD	CDec RU Drive	0-31	Fix	15	20	PiP RU-gain out 0:-6dB, 31:+3.3bD
91	IABL	CDec ABL	0,1	Fix	1	1	PiP ABL gain 0:Std, 1:Min
92	IABC	CDec ABL Cent	0-3	Fix	1	1	PiP ABL Center 0:Min, 1:Max
93	IRVD	CDec RV drive	0-31	Fix	15	17	PiP RY Drive (re-input)
94	IDLY	CDec Delay	0-3	Fix	0	0	PiP Y-delay 0:0ns, 1:60ns, 2:120ns 3:180ns
95	ISCR	CDec SCP BGR	0-3	Fix	0	0	PiP SCP riseup phase 0:+0.4us, 1:cent, 2:-0.8us
96	ISCF	CDec SCP BGF	0-3	Fix	0	0	PiP SCP falldown phase 0:+0.4us, 1:cent, 2:-0.8us
		PI + CD + PiP + Vchip					
97	PFRN	VCXO Oscillation	0,1	Fix	0	0	0: Lock 1: Free Run…FREE_RUN
98	PRVS	HD/VD Input Synchronous Mode Selection	0,1	Fix	0	0	0: Sync 1: Async…RVS
99	PCON	Sub-Contrast	0-127	Fix	32	40	0: Min 127: Max…CONTRAST
100	PUCO	Sub U Level Control	0-15	Fix	7	7	0: Min 15: Max…calculated
101	PVCO	Sub V Level Control	0-15	Fix	7	7	0: Min 15: Max…calculated
102	PHUE	Hue	0-31	Fix	15	11	0: Red 31: Green…calculated
103	PKIL	Color Killer	0,1	Fix	0	0	0: Enable 1: Disable…KILLER
104	PSEP	C-Sync Sep Input Selection	0-3	Fix	2	2	0: Digital 1:23pin in 2:ext 18p 3:int analog…EXT_SC_SEL
105	PDCO	Digital Sync Sep Threshold Setting	0-3	Fix	0	0	Threshold Setting…DCOUNT
106	PEXP	Ext Port Setting	0-3	Fix	2	2	0/1: Sub BGP 2: "0" out 3: "1" out…EXPORT
107	PBGS	BGP Position Setting	0-63	Fix	14	14	Sub Picture BGP Position…BG_START
108	PYDL	Y/C Delay Adjust	0-15	Fix	7	7	Sub Picture Y/C Delay…YDL
109	PBRT	Y Brightness	0-31	Fix	25	25	Sub Picture Y Bright Control…Y_OFFSET
110	PVPE	V Pedestal Level	0-15	Fix	0	0	V Pedestal Level (2's comp)…PEDESTV
111	PUPE	U Pedestal Level	0-15	Fix	0	0	U Pedestal Level (2's comp)…PEDESTU
112	PACS	0Dh/0Eh Setting Mode	0,1	Fix	1	1	
113	PSDL	Sync Delay	0-3	Fix	0	0	
114	PMVP	Macrovision Mode Selection	0-3	Fix	0	0	
115	PCGA	Chrome Gain Mode	0,1	Fix	1	1	
116	PBIT	Y Clamp Time Constant	0,1	Fix	0	0	
117	PAFC	AFC Time Constant	0,1	Fix	0	0	

****AVERAGE DATA MODEL GROUPINGS:**

32" A: KV-32S42	**35" G: KV-35S42**
C: KV-32S66	**I: KV-35S66**
D: KV-32V42	**L: KV-35V42**

Adjustment Items (cont.)

No.	Register Name	Description	Data Range	Adj/Fix	Initial Data	Average Data** 32" A,C	32" D	35" G	35" I	35" L	Comments
118	PACC	Color Decoder Amplitude	0-63	Fix	15	15					
119	PBUR	VCXO Mode Selection	0,1	Fix	0	0					
120	PEVE	Main Picture PAL-N	0,1	Fix	0	0					
121	PINW	Invert Sub Picture Field Definition	0,1	Fix	0	0					
122	PINR	Invert Main Picture Field Definition	0,1	Fix	0	0					
123	PREF	Main Picture Field Fix	0,1	Fix	0	0					
124	PARE	Auto 50/60 Hz Detection	0,1	Fix	1	1					
125	PAVE	Sub Picture Decode Mode	0,1	Fix	0	0					
126	PFRA	Freq Adj for Free Run Mode	0-15	Fix	0	0					
127	PPAL	Parameter Setting for PAL-M Judgement	0-255	Fix	0	0					
128	PHPO	Sub Picture H Position	0-31	Fix	6	15					
129	PVPO	Sub Picture V Position	0-31	Fix	22	22					
130	PHTI	Display Timing Adjustment	0-15	Fix	10	10					
131	PHAJ	Main/Sub Switch Delay Control	0-15	Fix	2	2					
132	PBGY	Background Y Level Setting	0-15	Fix	0	0					
133	PCRO	Sub Picture Read Mode	0,1	Fix	0	0					
134	PPAR	Threshold Control For Ident Judge of Subject	0-63	Fix	2	2					
135	PHPF	Y Output HPF	0,1	Fix	1	0					
136	PVCH	15h, 16h, 17h Setting Mode	0,1	Fix	0	0					
137	PVON	Sub V-Chip Decode Mode	0,1	Fix	1	1					
138	PVLN	Sub V-Chip Slicer Line Select	0-31	Fix	17	17					
139	PVSB	Sub V-Chip Slicer Start Bit Detect Param	0-255	Fix	64	64					
140	PVLV	Sub V-Chip Data Slicer Level Param	0-255	Fix	130	130					
No.	Register Name	Description	Data Range	Adj/Fix	Initial Data	Average Data** 32" A,C	32" D	35" G	35" I	35" L	Comments
		CC CXP85840a-011s									
141	CRIL	CC CRI count low	0-15	Fix	2	2					7 Clock Run-In Lower Limit (field 1)
142	CFLD	CC Caption Fixed Field Count	0-15	Fix	5	5					Fixed value only
143	CCDI	CC CCD int	0-7	Fix	3	3					Fixed value only
144	CRIP	CC CRI & polarity	0-7	Fix	4	4					Fixed value only
145	CRIT	CC CRI time constant	0-3	Fix	1	1					Fixed value only
146	CSB1	CC Sync Slice Bias 1	0-3	Fix	3	3					Fixed value only
147	CSB2	CC Synce Slice Bias 2	0-7	Fix	4	4					Fixed value only
148	CREP	CC CRI signal end position	0-255	Fix	142	142					Fixed value only
149	CDSD	CC Data start delay	0-31	Fix	8	8					Fixed value only
150	CCDS	CC Caption data threshold	0-31	Fix	9	9					Fixed value only
151	CHMK	CC P8_HMASK	0-63	Fix	42	42					Hmask
152	CHSY	CC P8_HSYC	0-255	Fix	136	136					Hsyc
153	DISP	TV OSD H Position	0-63	*Adj*	1	23					0:Off, 1:Left, 63: Right
154	RTCO	Rotation Coil	0-63	Fix	32	32					Fixed value only
		ID MAP									
155	ID-0	ID-0 (Language/Color Systems)	0-255	Fix by model	89						See ID map
156	ID-1	ID-1 (Input/Output Conifguration)	0-255	Fix by model	55						See ID map
157	ID-2	ID-2 (Audio)	0-255	Fix by model	175						See ID map
158	ID-3	ID-3 (OSD/Timer/V-chip/Ch Fix)	0-255	Fix by model	0	Refer to Feature ID Map					See ID map
159	ID-4	ID-4 (CC/Spot Killer/etc)	0-255	Fix by model	155						See ID map
160	ID-5	ID-5 (V-series Features/etc)	0-255	Fix by model	141						See ID map
161	ID-6	ID-6 (PiP/Ant Sw related)	0-255	Fix by model	6						See ID map
162	ID-7	ID-7 (Special Models/etc)	0-255	Fix by model	0						See ID map

****AVERAGE DATA MODEL GROUPINGS:**

32"		35"	
A:	KV-32S42	G:	KV-35S42
C:	KV-32S66	I:	KV-35S66
D:	KV-32V42	L:	KV-35V42

SERVICE IDO 25

Note: Items 1-162 show adjustment order

5-5. Feature ID Map

	Destination	ID-0	ID-1	ID-2	ID-3	ID-4	ID-5	ID-6	ID-7
KV-32S42	(US)	25	17	31	106	11	129	0	0
KV-32S42	(CND)	89	17	31	58	11	129	0	0
KV-32S66	(US)	25	21	31	106	11	133	6	0
KV-32S66	(CND)	89	21	31	58	11	133	6	0
KV-32V42	(US)	25	23	175	106	11	129	0	0
KV-35S42	(US)	25	17	31	106	139	129	0	0
KV-35S42	(CND)	89	17	31	58	139	129	0	0
KV-35S66	(US)	25	21	31	106	139	133	6	0
KV-35S66	(CND)	89	21	31	58	139	133	6	0
KV-35V42	(US)	25	23	175	106	139	129	0	0

SUB BRIGHT ADJUSTMENT (SBRT)

1. Set to Service adjustment Mode.
2. Input a gray scale pattern signal.
3. Set the PICTURE to minimum, and BRIGHT to normal.
4. Select SBRT with [1] and [4].
5. Adjust SUB BRIGHT level with [3] and [6] so that the stripe second from the right is faintly visible.
6. Write into the memory by pressing [MUTING] then [ENTER]**.

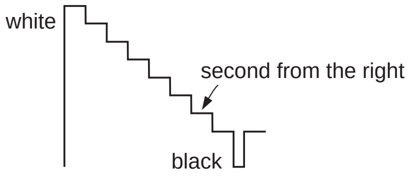

SUB CONTRAST ADJUSTMENT (SCON)

1. Input a color-bar signal.
2. Set to Service adjustment Mode.
3. Select the item DCOL to "0" level.
4. Set the conditions as follows.

PICTURE .... MAX
COLOR .... MIN
BRIGHT .... CENTER
R ON .... ON (1)
G ON .... OFF (0)
B ON .... OFF (0)

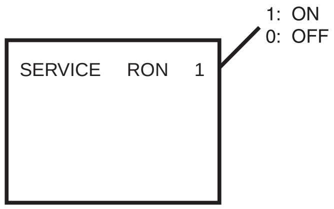

5. Connect an oscilloscope probe to C Board, CN1761 pin 1 (RED OUT).
6. Select SCON with [1] and [4].
7. Adjust with [3] and [6] for: 1.80 ± 0.05 Vp-p.

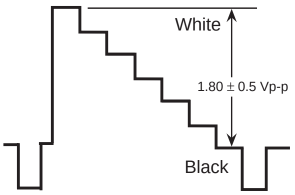

8. Reset the item DCOL to "1" level.
9. Write the memory by pressing [MUTING] then [ENTER]**.

10. Return the following back to normal after adjustment.

PICTURE .... MAX
COLOR .... MIN
BRIGHT .... CENTER
R ON .... ON (1)
G ON .... ON (1)
B ON .... ON (1)

DISPLAY POSITION ADJUSTMENT (DISP)

1. Input a color-bar signal.
2. Set to Service adjustment Mode.
3. Select DISP with [1] and [4].
4. Adjust with [3] and [6] for adjustment of characters to center.
5. Write the memory by pressing [MUTING] then [ENTER]**.

SUB HUE, SUB COLOR ADJUSTMENT (SHUE, SCOL)

1. Input a color-bar signal.
2. Set to Service adjustment Mode.
3. Connect oscilloscope probe to C Board, CN1761 Pin3 (BLUE OUT).
4. Select SHUE and SCOL with [1] and [4].
5. Adjust with [3] and [6] for the V1 = V4 ± 0.1Vp-p (SCOL) and V2 = V3 ± 0.1Vp-p (SHUE).

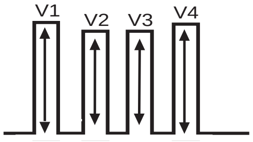

6. Change data according to the following table:

	SCOL	SHUE
32"	+2 steps	-1 steps
35"	+2 steps	-1 steps

7. Write into the memory by pressing [MUTING] then [ENTER]**.

**WARNING: Do NOT turn off the power or AC immediately after pressing [MUTING] then [ENTER]. Wait at least 10 seconds.

V. SIZE ADJUSTMENT (VSIZ)

1. Input a cross-hatch signal.
2. Set to Service Adjustment mode.
3. Select VSIZ with 1 and 4 .
4. Adjust with 3 and 6 for the best vertical size.

V SIZE

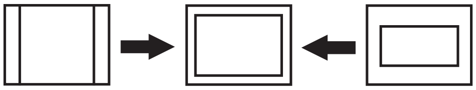

V. POSITION ADJUSTMENT (VPOS)

1. Input a cross-hatch signal.
2. Set to Service Adjustment Mode.
3. Select VPOS with 1 and 4 .
4. Adjust with 3 and 6 for the best vertical center.
5. Write into the memory by pressing MUTING then ENTER **.

V POSITION

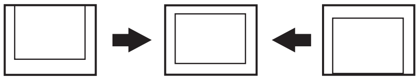

H. POSITION ADJUSTMENT (HPOS)

1. Input a cross-hatch signal.
2. Set the Service Adjustment Mode.
3. Select HPOS with 1 and 4 .
4. Adjust with 3 and 6 for the best horizontal center.
5. Write into the memory by pressing MUTING then ENTER **.

H. POSITION

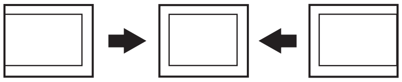

V LINEARITY (VLIN), V CORRECTION (VSCO), PIN AMP (PAMP) AND PIN PHASE (PPHA) ADJUSTMENTS

1. Input a cross-hatch signal.
2. Set to Service Adjustment Mode.
3. Select VLIN, VSCO, PAMP, and PPHA with 1 and 4 .
4. Adjust with 3 and 6 for the best picture.
5. Write the memory by Pressing MUTING then ENTER ** .

V LINEARITY(VLIN)

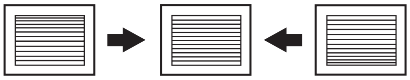

VS CORRECTION (VSCO)

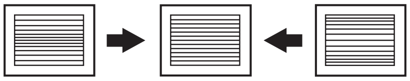

PIN AMP (PAMP)

PIN PHASE (PPHA)

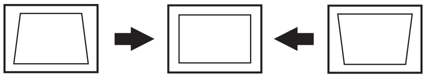

V ANGLE (VANG), V BOW (VBOW), UPPER PIN (UPIN) AND LOW PIN (LPIN) ADJUSTMENTS

1. Input a cross hatch signal.
2. Set to Service adjustment Mode.
3. Select VVANG, VBOW, UPIN, and LPIN with 1 and 4 .
4. Adjust with 3 and 6 for the best picture.
5. Write the memory by Pressing MUTING then ENTER ** .

V ANGLE (VANG)

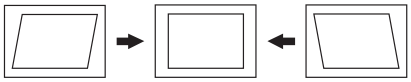

V BOW (VBOW)

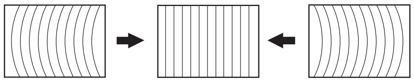

UPPER PIN (UPIN)

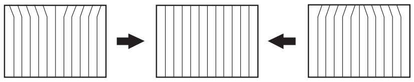

LOW PIN (LPIN)

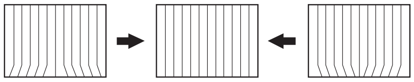

P BOARD ADJUSTMENTS

PIP V. POSITION (PIPV), PIP H. POSITION (PIPH)

1. Input a color bar signal.
2. Set to service adjustment mode.
3. Select PHOP with 1 and 4 .
4. Adjust with 3 and 6 for the best balanced position at four corner P in P display position.
5. Adjust P in P put at lower right position.
6. Write the memory by Pressing MUTING then ENTER **.

**WARNING: Do NOT turn off the power or AC immediately after pressing MUTING then ENTER. Wait at least 10 seconds.

NOTES:

SECTION 6
DIAGRAMS

6.1 BLOCK DIAGRAM (1/1)

(KV-32S42/35S42 ONLY)

6.2.1 BLOCK DIAGRAM (1/2)

(KV-32S66/32V42/35S66/35V42 ONLY)

6.2.2 BLOCK DIAGRAM (2/2)

(KV-32S66/32V42/35S66/35V42 ONLY)

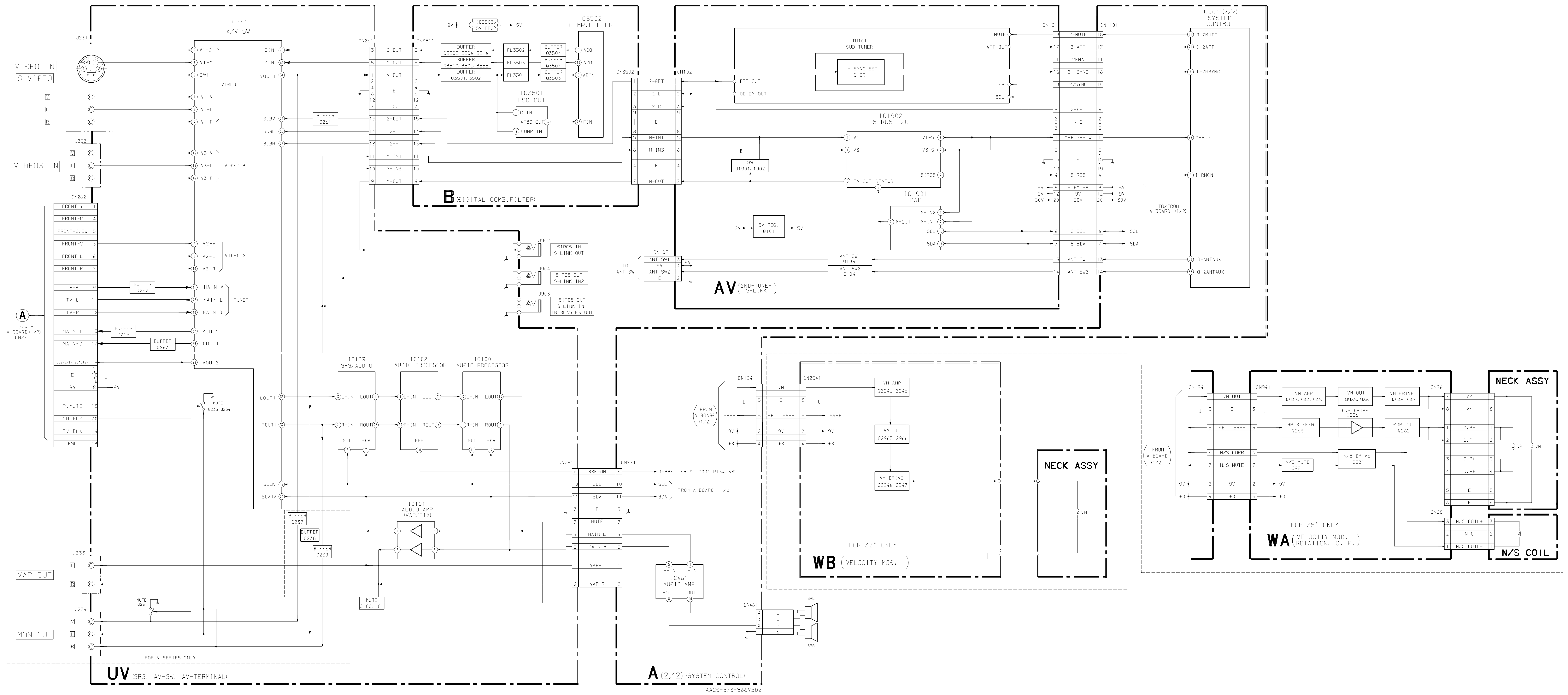

6-3. CIRCUIT BOARDS LOCATION

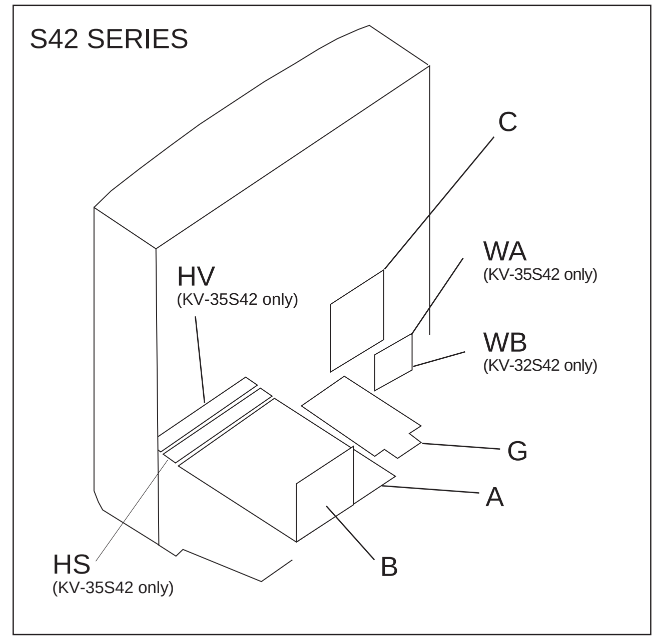

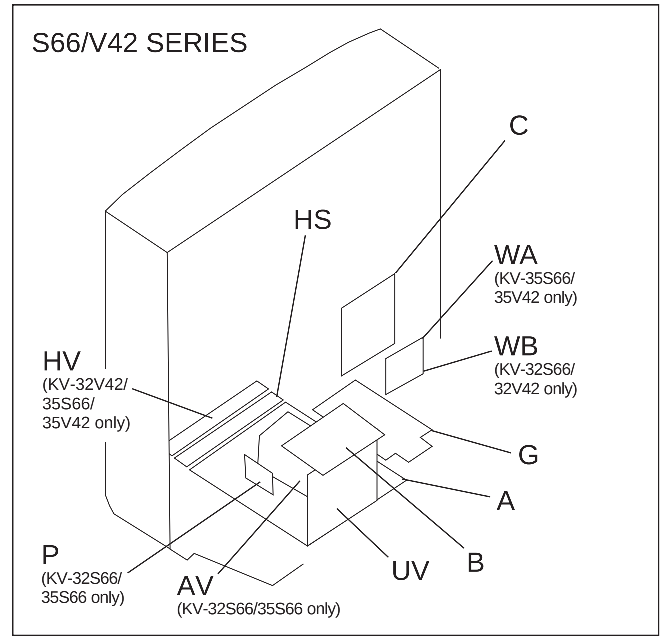

6-4. PRINTED WIRING BOARDS AND SCHEMATIC DIAGRAMS

- All capacitors are in µF unless otherwise noted. pF : µµF 50WV or less are not indicated except for electrolytics and tantalums.
- All electrolytics are in 50V unless otherwise specified.
- All resistors are in ohms.
  KΩ=1000Ω, MΩ=1000kΩ
- Indication of resistance, which does not have one for rating electrical power, is as follows.

Pitch : 5mm
Rating electrical power : $^1/_4$ W

- $^1/_4$ W in resistance, $^1/_{10}$ W and $^1/_8$ W in chip resistance.
- : nonflammable resistor.
- : fusible resistor.
- △ : internal component.
- : panel designation and adjustment for repair.
- All variable and adjustable resistors have characteristic curve B, unless otherwise noted.
- The components identified by ⧓ in this basic schematic diagram have been carefully factory-selected for each set in order to satisfy regulations regarding X-ray radiation.
  Should replacement be required, replace only with the value originally used.
- When replacing components identified by ◢, make the necessary adjustments indicated. If results do not meet the specified value, change the component identified by ⧓ and repeat the adjustment until the specified value is achieved. (Refer to R530 and R531 adjustment on Page 15.)
- When replacing the part in below table, be sure to perform the related adjustment.
- Readings are taken with a color-bar signal input.
- Readings are taken with a 10MΩ digital multimeter.
- Voltages are DC with respect to ground unless otherwise noted.
- Voltage variations may be noted due to normal production tolerances.
- All voltages are in V.
  S : Measurement impossibillity.

Part replaced (◢)	Adjustment(⧓)
IC351,IC501,D519,D520,D521 C531,C532,R387,R529,R530,R531, R532,R533,R550,T503......A BOARD IC643,R661......................G BOARD	R530,R531

- : B+line.
- V : B-line.
  (Actual measured value may be different).
- : signal path. (RF)
- Circled numbers are waveform references.

Reference information

RESISTOR	: RN	METAL FILM
	: RC	SOLID
	: FPRD	NONFLAMMABLE CARBON
	: FUSE	NONFLAMMABLE FUSIBLE
	: RW	NONFLAMMABLE WIREWOUND
	: RS	NONFLAMMABLE METAL OXIDE
	: RB	NONFLAMMABLE CEMENT
	: ※	ADJUSTMENT RESISTOR
COIL	: LF-8L	MICRO INDUCTOR
CAPACITOR	: TA	TANTALUM
	: PS	STYROL
	: PP	POLYPROPYLENE
	: PT	MYLAR
	: MPS	METALIZED POLYESTER
	: MPP	METALIZED POLYPROPYLENE
	: ALB	BIPOLAR
	: ALT	HIGH TEMPERATURE
	: ALR	HIGH RIPPLE

The symbol display is on the component side. The components identified by shading and mark ⚠ are critical for safety. Replace only with part number specified.
The symbol indicate fast operating fuse. Replace only with fuse of same rating as marked.

Les composants identifiés per un tramé et une marque ⚠ sont critiques pour la sécurité. Ne les remplacer que par une piéce portant le numéro spécifié.
Le symbole indique une fusible a action rapide. Doit etre remplacee par une fusible de meme yaleur, comme maque.

A [MICON, Y/C/J, TUNER, VOL-CTL, AUDIO AMP, PIN-MOD, V-DEF, H-DEF, AV-SW] (KV-32S42/32V42 ONLY)

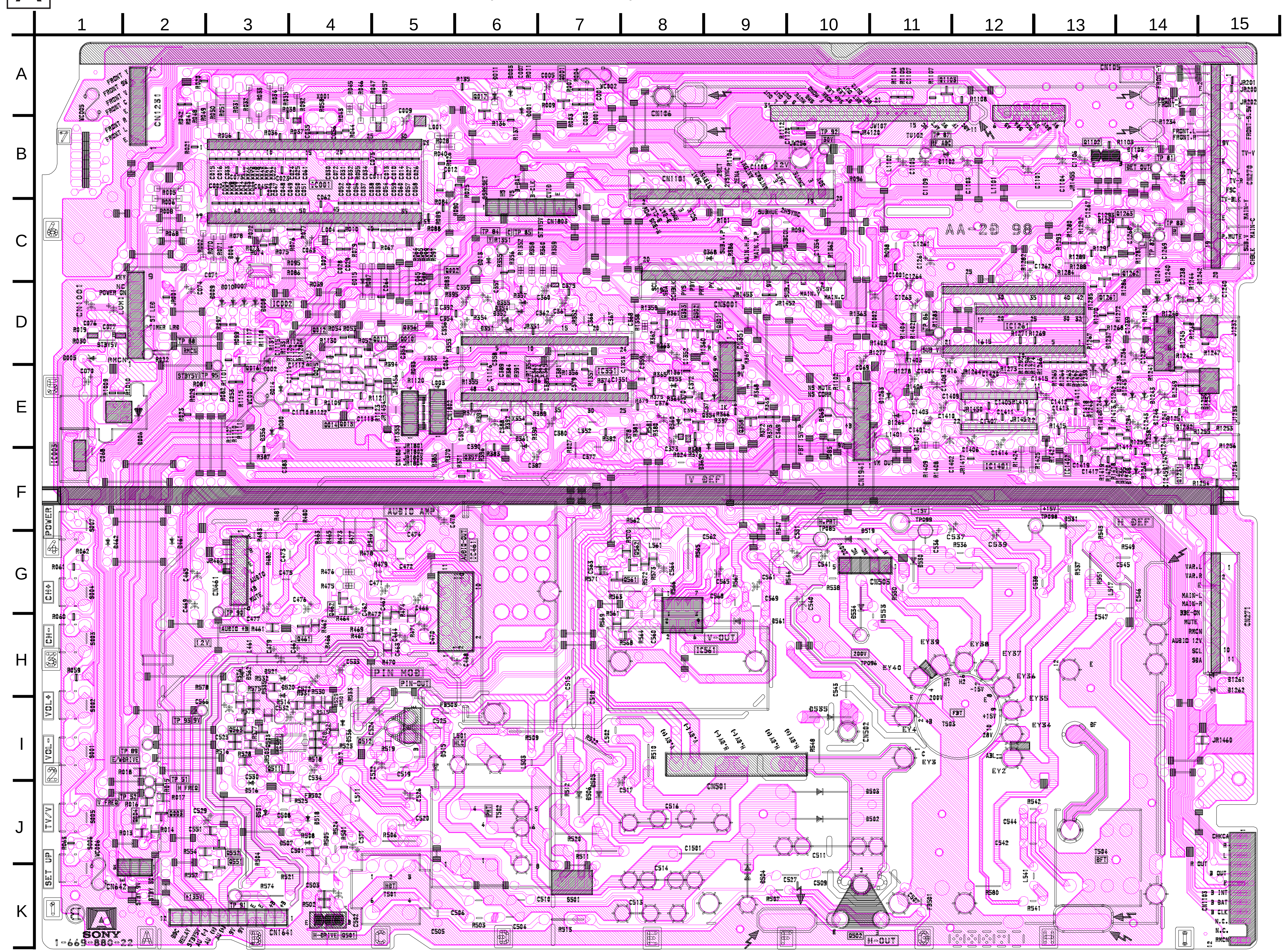

A BOARD LOCATOR LIST
(KV-32S42/32V42 ONLY)

DIODE		TRANSISTOR	
D001	B6	Q001	A7
D002	E3	Q002	C6
D003	A6	Q003	J2
D004	C3	Q004	J2
D005	D1	Q010	E4
D006	E2	Q011	E4
D011	A6	Q012	D4
D013	C6	Q013	E4
D014	E3	Q014	E4
D015	D4	Q015	E4
D353	E8	Q016	E3
D356	E3	Q017	B6
D360	E8	Q301	D9
D362	E9	Q302	D8
D368	C9	Q303	D8
D462	G1	Q354	E8
D501	J3	Q356	D5
D502	J10	Q357	F6
D503	I10	Q358	E9
D504	J9	Q461	H4
D505	J7	Q462	G4
D506	J7	Q501	K4
D507	J4	Q502	K10
D515	I5	Q511	I4
D516	I3	Q512	I5
D518	J4	Q551	J2
D519	G10	Q552	J2
D520	H3	Q561	G7
D521	H3	Q562	G7
D530	G11	Q563	I3
D531	F13	Q1102	B13
D534	G10	Q1103	A11
D536	I4	Q1231	F14
D561	G9	Q1232	E14
D562	H3	Q1261	C13
D1102	B11	Q1262	C13
D1103	B14	Q1263	C13
D1247	F14	CRYSTAL	
D1248	E14	X001	A4
D1261	H15	X353	D5
D1262	H15	X354	E6
D1263	E11	#: Not Mounted	
D1264	E11		
IC			
IC001	C4		
IC002	D3		
IC003	F1		
IC351	E7		
IC461	G6		
IC501	I3		
IC561	H8		
IC1261	D12		
IC1401	E12		
IC1402	E13		

A BOARD LOCATOR LIST
(KV-32S66 ONLY)

DIODE		TRANSISTOR	
D001	B6	Q001	A7
D002	E3	Q002	C6
D003	A6	Q003	J2
D004	C3	Q004	J2
D005	D1	Q010	E4
D006	E2	Q011	E4
D011	A6	Q012	D4
D013	C6	Q013	E4
D014	E3	Q014	E4
D015	D4	Q015	E4
D353	E8	Q016	E3
D356	E3	Q017	B6
D360	E8	Q018	E10
D362	E9	Q301	D9
D368	C9	Q302	D8
D462	G1	Q303	D8
D501	J3	Q354	E8
D502	J10	Q356	D5
D503	I10	Q357	F6
D504	J9	Q358	E9
D505	J7	Q461	H4
D506	J7	Q462	G4
D507	J4	Q501	K4
D515	I5	Q502	K10
D516	I3	Q511	I4
D518	J4	Q512	I5
D519	G10	Q551	J2
D520	H3	Q552	J2
D521	H3	Q561	G7
D530	G11	Q562	G7
D531	F13	Q563	I3
D534	G10	Q1102	B13
D536	I4	Q1103	A11
D561	G9	Q1231	F14
D562	H3	Q1232	E14
D1102	B11	Q1261	C13
D1103	B14	Q1262	C13
D1247	F14	Q1263	C13
D1248	E14	CRYSTAL	
D1261	H15	X001	A4
D1262	H15	X353	D5
D1263	E11	X354	E6
D1264	E11	#: Not Mounted	
IC			
IC001	C4		
IC002	D3		
IC003	F1		
IC351	E7		
IC461	G6		
IC501	I3		
IC561	H8		
IC1261	D12		
IC1401	E12		
IC1402	E13		

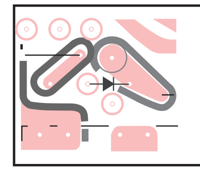

NOTE:
Portions of the circuit marked as shown are high voltage areas. Use care to prevent electric shocks during inspection or repair.

A [MICON, Y/C/J, TUNER, VOL-CTL, AUDIO AMP, PIN-MOD, V-DEF, H-DEF, AV-SW] (KV-32S66ONLY)

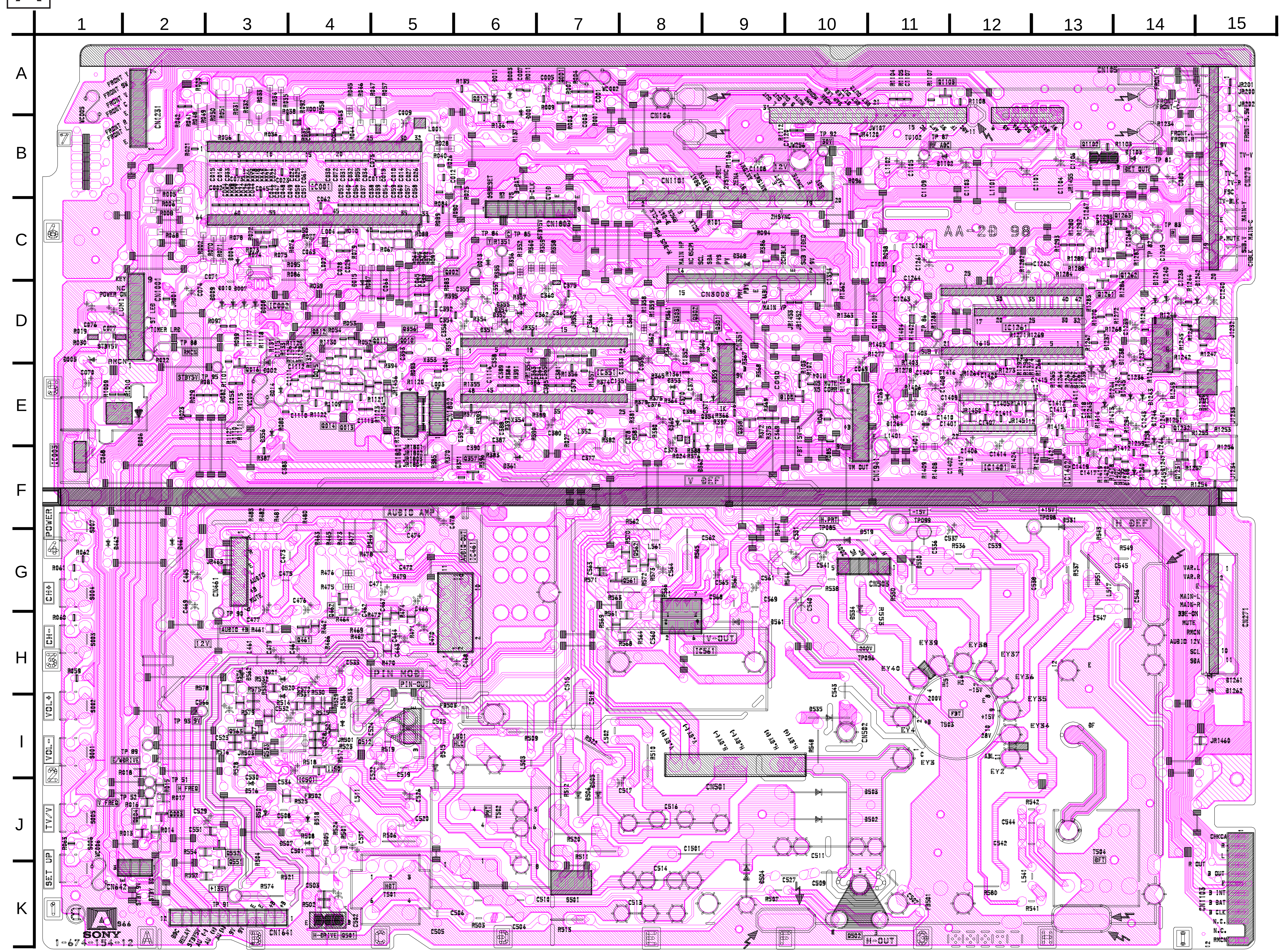

A BOARD: IC351 CXA2095S

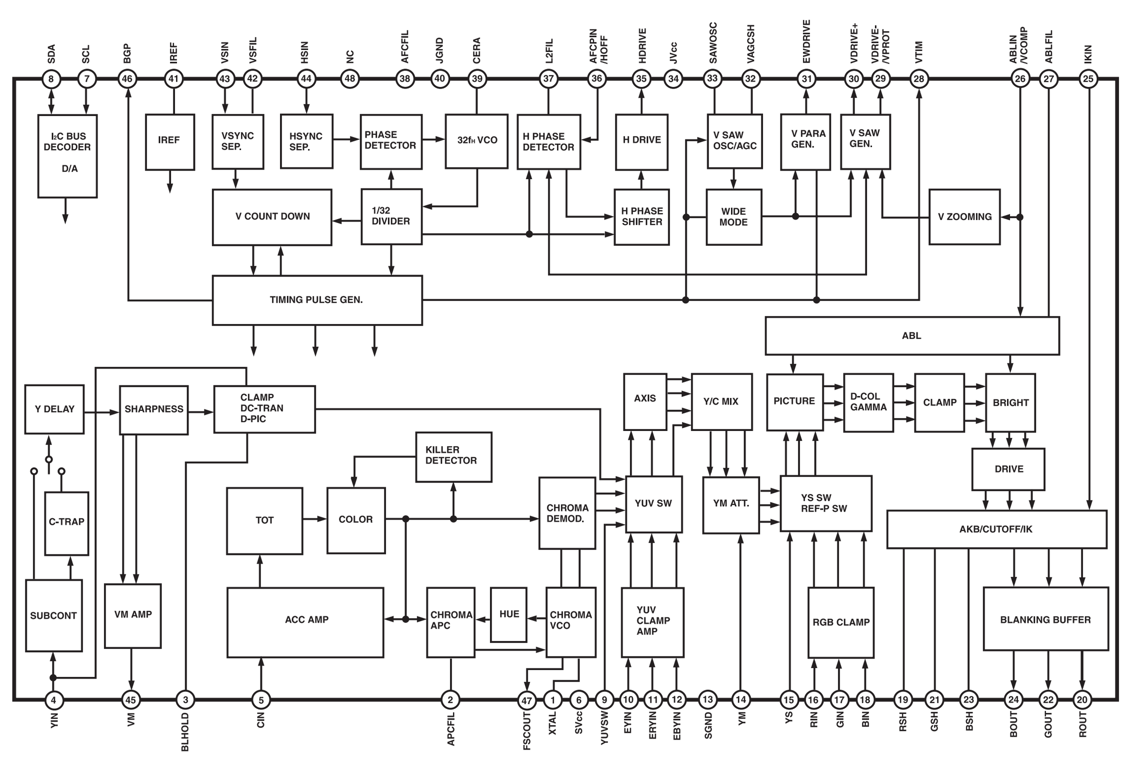

A BOARD: IC1401 CXA2021S

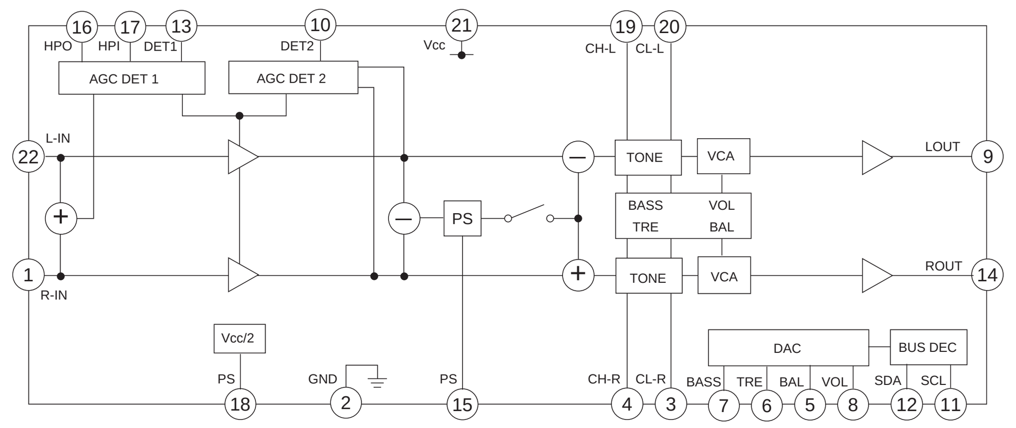

A BOARD: IC561 TDA8172

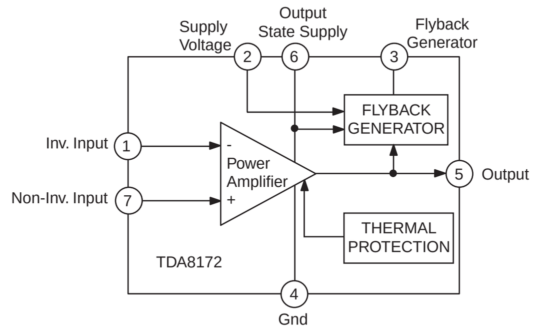

A BOARD: IC1261 MM1311AD

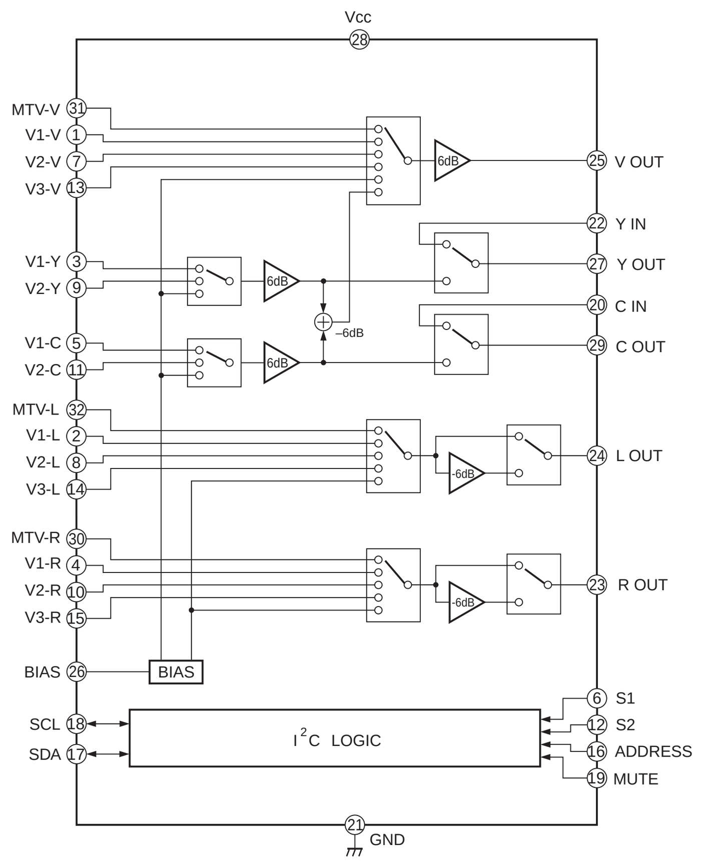

A BOARD: IC1261 MM1313AD

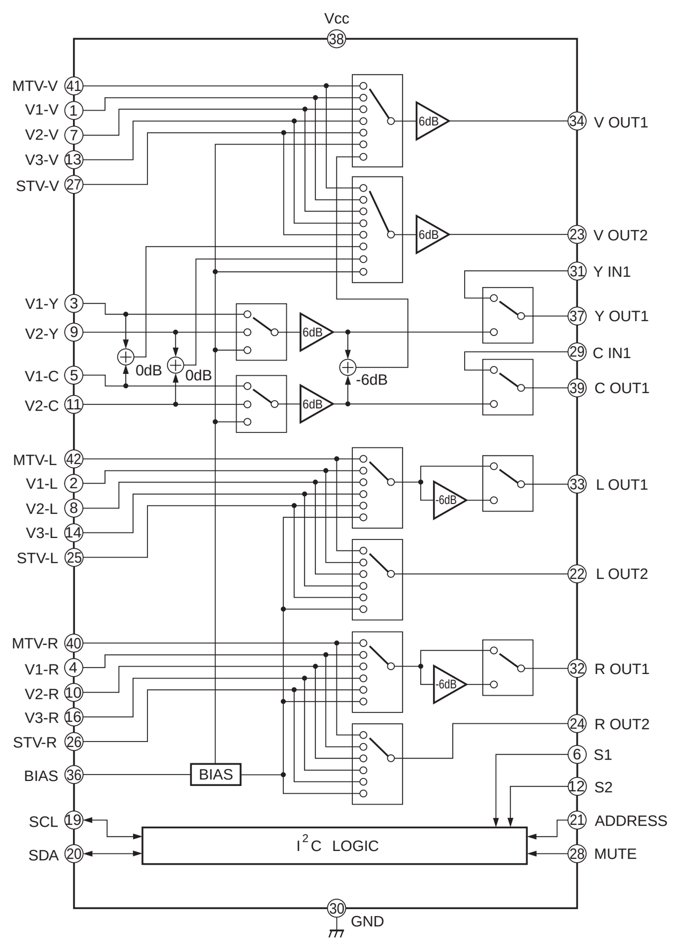

A [MICON, Y/C/J, TUNER, VOL-CTL, AUDIO AMP, PIN-MOD, V-DEF, H-DEF, AV-SW] (KV-35S42/35V42 ONLY)

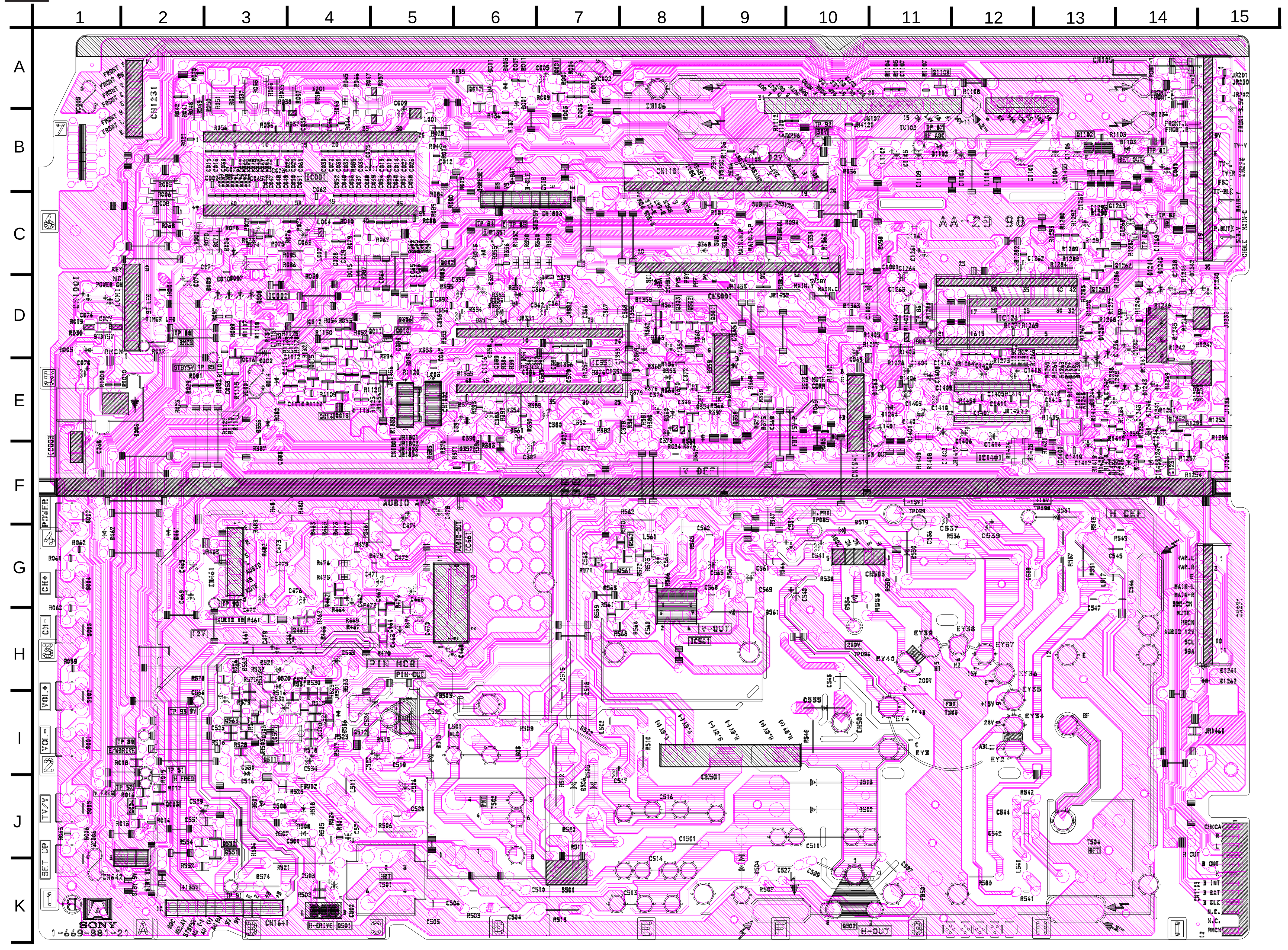

A BOARD LOCATOR LIST (KV-35S42/35V42 ONLY)

DIODE		TRANSISTOR	
D001	B6	Q001	A7
D002	E3	Q002	C6
D003	A6	Q003	J2
D004	C3	Q004	J2
D005	D1	Q010	E4
D006	E2	Q011	E4
D011	A6	Q012	D4
D013	C6	Q013	E4
D014	E3	Q014	E4
D015	D4	Q015	E4
D353	E8	Q016	E3
D356	E3	Q017	B6
D360	E8	Q301	D9
D362	E9	Q302	D8
D368	C9	Q303	D8
D462	G1	Q354	E8
D501	J3	Q356	D5
D502	J10	Q357	F6
D503	I10	Q358	E9
D504	J9	Q461	H4
D505	J7	Q462	G4
D506	J7	Q501	K4
D507	J4	Q502	K10
D515	I5	Q511	I4
D516	I3	Q512	I5
D518	J4	Q551	J2
D519	G10	Q552	J2
D520	H3	Q561	G7
D521	H3	Q562	G7
D530	G11	Q563	I3
D531	F13	Q1102	B13
D534	G10	Q1103	A11
D536	I4	Q1231	F14
D561	G9	Q1232	E14
D562	H3	Q1261	C13
D1102	B11	Q1262	C13
D1103	B14	Q1263	C13
D1247	F14	**CRYSTAL**	
D1248	E14	X001	A4
D1261	H15	X353	D5
D1262	H15	X354	E6
D1263	E11		
D1264	E11		
IC			
IC001	C4		
IC002	D3		
IC003	F1		
IC351	E7		
IC461	G6		
IC501	I3		
IC561	H8		
IC1261	D12		
IC1401	E12		
IC1402	E13		

A BOARD LOCATOR LIST (KV-35S66 ONLY)

DIODE		TRANSISTOR	
D001	B6	Q001	A7
D002	E3	Q002	C6
D003	A6	Q003	J2
D004	C3	Q004	J2
D005	D1	Q010	E4
D006	E2	Q011	E4
D011	A6	Q012	D4
D013	C6	Q013	E4
D014	E3	Q014	E4
D015	D4	Q015	E4
D353	E8	Q016	E3
D356	E3	Q017	B6
D360	E8	Q018	E10
D362	E9	Q301	D9
D368	C9	Q302	D8
D462	G1	Q303	D8
D501	J3	Q354	E8
D502	J10	Q356	D5
D503	I10	Q357	F6
D504	J9	Q358	E9
D505	J7	Q461	H4
D506	J7	Q462	G4
D507	J4	Q501	K4
D515	I5	Q502	K10
D516	I3	Q511	I4
D518	J4	Q512	I5
D519	G10	Q551	J2
D520	H3	Q552	J2
D521	H3	Q561	G7
D530	G11	Q562	G7
D531	F13	Q563	I3
D534	G10	Q1102	B13
D536	I4	Q1103	A11
D561	G9	Q1231	F14
D562	H3	Q1232	E14
D1102	B11	Q1261	C13
D1103	B14	Q1262	C13
D1247	F14	Q1263	C13
D1248	E14	**CRYSTAL**	
D1261	H15	X001	A4
D1262	H15	X353	D5
D1263	E11	X354	E6
D1264	E11		
IC			
IC001	C4		
IC002	D3		
IC003	F1		
IC351	E7		
IC461	G6		
IC501	I3		
IC561	H8		
IC1261	D12		
IC1401	E12		
IC1402	E13		

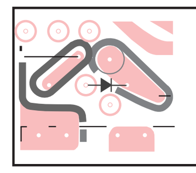

NOTE:
Portions of the circuit marked as shown are high voltage areas. Use care to prevent electric shocks during inspection or repair.

A [MICON, Y/C/J, TUNER, VOL-CTL, AUDIO AMP, PIN-MOD, V-DEF, H-DEF, AV-SW] (KV-35S66 ONLY)

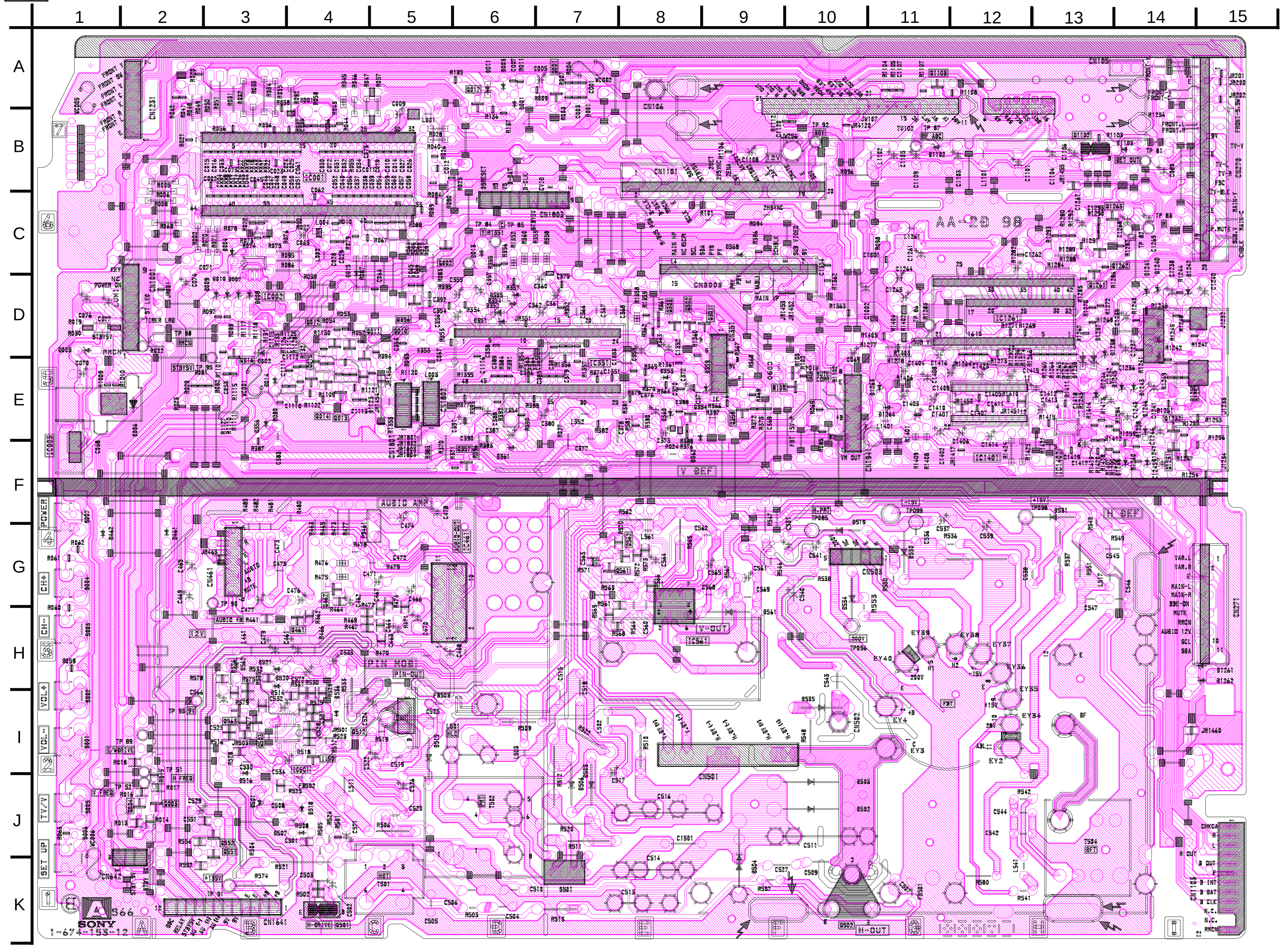

A BOARD SCHEMATIC DIAGRAM

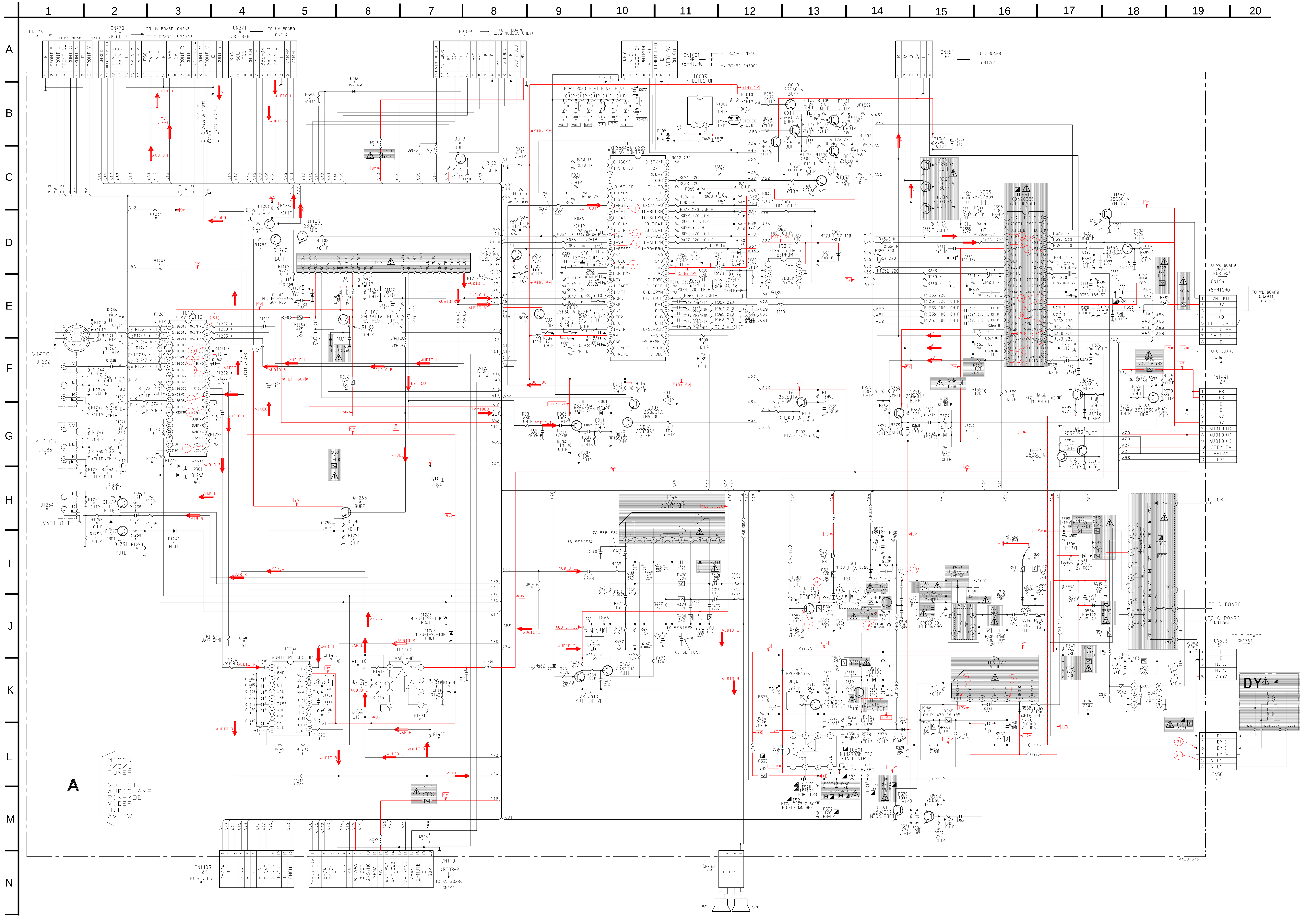

A Board →

A BOARD MARK (*) LIST

REF #	LOC	KV-32S42	KV-32S66	KV-32V42	KV-35S42	KV-35S66	KV-35V42
C068	B11	0.01µF	#	#	#	#	#
C069	C11	#	#	#	10µF	10µF	10µF
C076	A9	#	#	#	#	#	1µF
C077	A10	#	#	#	#	#	1µF
C090	C7	#	0.0047µF	#	#	0.0047µF	#
C360	D15	#	0.1µF	#	#	0.1µF	#
C361	D15	#	0.1µF	#	#	0.1µF	#
C362	D15	#	0.1µF	#	#	0.1µF	#
C370	F15	0.022µF	0.022µF	0.022µF	0.047µF	0.047µF	0.047µF
C375	E15	0.1µF	0.1µF	0.1µF	0.1µF	#	#
C461	J9	100µF	100µF	10µF	100µF	100µF	100µF
C513	J14	0.056µF	0.056µF	0.056µF	0.033µF	0.033µF	0.033µF
C514	J15	0.62µF	0.62µF	0.62µF	0.82µF	0.82µF	0.82µF
C520	K13	1000PF	1000PF	1000PF	0.0022µF	0.0022µF	0.0022µF
C521	K12	0.0022µF	0.0022µF	0.0022µF	0.0033µF	0.0033µF	0.0033µF
C537	I17	470µF	470µF	470µF	1000µF	1000µF	1000µF
C539	I17	470µF	470µF	470µF	1000µF	1000µF	1000µF
C542	K17	#	#	#	0.047µF	0.047µF	0.047µF
C1236	E2	0.01µF	#	#	0.01µF	#	#
C1237	E2	0.047µF	#	#	0.047µF	#	#
C1238	F2	0.047µF	#	#	0.047µF	#	#
C1239	F2	1µF	#	#	1µF	#	#
C1240	F2	1µF	#	#	1µF	#	#
C1241	G2	#	#	#	0.047µF	#	#
C1242	G2	#	#	#	1µF	#	#
C1243	H2	#	#	#	1µF	#	#
C1244	H2	0.47µF	#	#	0.47µF	#	#
C1245	H2	0.47µF	#	#	0.47µF	#	#
C1261	F4	47µF	#	#	47µF	#	#
C1262	F4	47µF	#	#	47µF	#	#
C1263	F4	1µF	#	#	1µF	#	#
C1264	G3	1µF	#	#	1µF	#	#
C1267	F5	0.047µF	#	#	0.047µF	#	#
C1268	E4	1µF	#	#	1µF	#	#
C1269	F4	1µF	#	#	1µF	#	#
C1293	H5	100PF	#	#	100PF	#	#
C1401	J4	0.47µF	#	#	0.47µF	#	#
C1402	K5	47µF	#	#	47µF	#	#
C1403	J4	0.47µF	#	#	0.47µF	#	#
C1404	K4	0.1µF	#	#	0.1µF	#	#
C1405	K4	0.0047µF	#	#	0.0047µF	#	#
C1406	K5	0.1µF	#	#	0.1µF	#	#
C1407	K5	0.0047µF	#	#	0.0047µF	#	#
C1408	K4K4	4.7µF	#	#	4.7µF	#	#
C1409	K4	4.7µF	#	#	4.7µF	#	#
C1410	K5	0.1µF	#	#	0.1µF	#	#
C1411	K5	0.1µF	#	#	0.1µF	#	#
C1413	K5	4.7µF	#	#	4.7µF	#	#
C1415	K4	10µF	#	#	10µF	#	#
C1416	K4	4.7µF	#	#	4.7µF	#	#
C1417	K7	1000µF	#	#	1000µF	#	#
C1420	K4	4.7µF	#	#	4.7µF	#	#
C1501	I15	0.12µF	0.12µF	0.12µF	#	#	#
CN271	A4	#	11P	11P	#	11P	11P
CN1101	N7	#	20P	#	#	20P	#
CN1231	A1	#	#	8P	#	#	8P
CN1941	E19	5P	5P	5P	8P	8P	8P
CN3003	A7	#	15P	#	#	15P	#
D005	B10	1SS133T-77	#	#	#	#	#
D006	B12	1-810-039-31	#	#	#	#	#
D368	A6	#	1SS133T-77	#	1SS133T-77	#	#
D1247	I2	RD10ESB2	#	#	RD10ESB2	#	RD10ESB2
D1248	I3	MTZJ-3.3	#	#	MTZJ-3.3	#	#
D1261	G3	RD10ESB2	#	#	RD10ESB2	#	RD10ESB2
D1262	H3	RD10ESB2	#	#	RD10ESB2	#	RD10ESB2
IC003	A11	SBX1981-51P	#	#	#	#	#
IC1261	E3	MM1311AD	#	#	MM1311AD	#	#
IC1401	J5	CXA2021S	#	#	CXA2021S	#	#
IC1402	J6	UPC4558G2	#	#	UPC4558G2	#	#
J1232	F1	0	#	#	0	#	#
J1233	G1	#	#	#	0	#	#
J1234	H1	0	#	#	0	#	0
JR001	C8	#	0	#	#	0	#
JR200	B3	#	#	0	#	#	0
JR351	D15	0	#	#	0	#	0
JR352	E15	0	#	#	0	#	0
JR1264	G2	0	#	#	0	#	0
JR1417	J5	#	0	0	#	0	0
JR1450	K5	0	#	#	0	#	#
JR1451	L5	0	#	#	0	#	#
L461	J9	8.2µH	8.2µH	15µH	8.2µH	8.2µH	15µH
L541	J17	#	#	#	10µH	10µH	10µH
L1401	J8	1µH	#	1µH	1µH	#	1µH
Q018	B7	#	2SD601A-Q	#	#	2SD601A-Q	#
Q1231	I2	2SD601A-Q	#	#	2SD601A-Q	#	2SC1623-L5L6
Q1232	H2	2SD601A-Q	#	#	2SD601A-Q	#	2SC1623-L5L6
Q1261	C4	2SA1162-G	#	#	2SA1162-G	#	2SA1037AK-T146-R
Q1262	D4	2SA1162-G	#	#	2SA1162-G	#	2SA1037AK-T146-R
Q1263	H6	2SD601A-Q	#	#	2SD601A-Q	#	2SC1623-L5L6
R006	C11	#	220	#	#	220	#
R008	C11	#	220	#	#	220	#
R012	E11	#	220	#	#	220	#
R031	C9	#	220	#	#	220	#
R040	F9	#	220	#	#	220	#
R041	C12	#	4.7K	#	#	4.7K	#
R042	C12	#	4.7K	#	#	4.7K	#
R044	E9	220	220	220	220	220	1K
R045	E9	#	220	#	#	220	#
R059	A9	820	#	#	#	#	#
R060	A9	1K	#	#	#	#	#
R061	A9	1.8K	#	#	#	#	#
R062	A10	4.7K	#	#	#	#	#
R063	A10	10K	#	#	#	#	#

REF #	LOC	KV-32S42	KV-32S66	KV-32V42	KV-35S42	KV-35S66	KV-35V42
R069	C11	#	#	#	10K	10K	10K
R074	D11	220	100	220	220	100	220
R075	D11	220	100	220	220	100	220
R085	C11	#	#	#	10K	10K	10K
R089	F11	#	#	220	#	#	220
R090	F11	#	220	#	#	220	#
R098	G5	2.2	#	2.2	2.2	#	2.2
R102	C8	#	#	#	#	47K	#
R104	C7	#	#	#	#	4.7K	#
R358	D15	#	220	#	#	220	#
R359	D15	#	220	#	#	220	#
R360	D15	#	220	#	#	220	#
R365	G15	150K	150K	150K	100K	100K	100K
R374	G15	1.5M	1.5M	1.5M	1M	1M	1M
R386	B5	#	1K	#	#	1K	#
R466	J9	3.9	3.9	2.2	3.9	3.9	3.9
R469	I10	6.8K	1.8K	1.8K	4.7K	1.8K	1.8K
R472	J10	6.8K	1.8K	1.8K	4.7K	1.8K	4.7K
R511	I16	68	68	68	100	100	100
R515	K12	27K	27K	27K	15K	15K	15K
R523	K13	10K	10K	10K	8.2K	8.2K	8.2K
R529	L13	22K	22K	22K	18K	18K	18K
R531	L13	68K	68K	68K	220K	220K	220K
R533	L12	47K	47K	47K	33K	33K	33K
R535	K12	150K	150K	150K	180K	180K	180K
R541	J17	#	#	#	0.47	0.47	0.47
R542	K17	#	#	#	22	22	22
R546	I17	22K	22K	22K	18K	18K	18K
R1009	B11	220	#	#	#	#	#
R1010	B12	220	#	#	#	#	#
R1234	D3	100K	#	#	100K	#	#
R1240	E2	75	#	#	75	#	#
R1241	E2	75	#	#	75	#	#
R1242	F2	4.7K	#	#	4.7K	#	#
R1243	D3	100K	#	#	100K	#	#
R1244	F2	75	#	#	75	#	#
R1245	F2	470K	#	#	470K	#	#
R1246	F2	4.7K	#	#	4.7K	#	#
R1247	G2	470K	#	#	470K	#	#
R1248	G2	4.7K	#	#	4.7K	#	#
R1249	G2	#	#	#	75	#	#
R1250	G2	#	#	#	470K	#	#
R1251	G2	#	#	#	4.7K	#	#
R1252	H2	#	#	#	470K	#	#
R1253	H2	#	#	#	4.7K	#	#
R1254	H2	470K	#	#	470K	#	#
R1255	H2	1K	#	0	1K	#	0
R1256	I2	470K	#	#	470K	#	#
R1257	H2	1K	#	#	1K	#	#
R1258	H2	3.3K	#	#	3.3K	#	#
R1259	I2	100K	#	#	100K	#	#
R1260	I2	3.3K	#	#	3.3K	#	#
R1261	E3	220	#	#	220	#	#
R1262	E2	100	#	#	100	#	#
R1263	E2	220	#	#	220	#	#
R1264	F2	100	#	#	100	#	#
R1265	F2	220	#	#	220	#	#
R1266	F2	100	#	#	100	#	#
R1267	F2	0	#	#	0	#	#
R1268	F2	100	#	#	100	#	#
R1270	F3	100	#	#	100	#	#
R1273	F2	#	#	#	220	#	#
R1274	G2	#	#	#	100	#	#
R1277	G3	220	#	#	220	#	#
R1278	G3	220	#	#	220	#	#
R1280	E4	100	#	#	100	#	#
R1282	F4	100	#	#	100	#	#
R1283	G3	#	#	#	22	#	#
R1284	D4	100	#	#	100	#	#
R1286	C4	1K	#	#	1K	#	#
R1287	C5	1K	#	#	1K	#	#
R1288	D4	100	#	#	100	#	#
R1290	H6	470	#	#	470	#	#
R1291	I6	680	#	#	680	#	#
R1292	E4	4.7K	#	#	4.7K	#	#
R1293	E4	4.7K	#	#	4.7K	#	#
R1294	H3	1K	#	#	1K	#	#
R1295	H3	1K	#	#	1K	#	#
R1296	G2	#	#	#	100	#	#
R1407	L7	10K	#	#	10K	#	#
R1410	L4	1M	#	#	1M	#	#
R1411	J6	10K	#	#	10K	#	#
R1412	K6	22K	#	#	22K	#	#
R1413	K6	47K	#	#	47K	#	#
R1414	K6	47K	#	#	47K	#	#
R1415	K6	100	#	#	100	#	#
R1418	K7	22K	#	#	22K	#	#
R1419	K7	47K	#	#	47K	#	#
R1420	K7	47K	#	#	47K	#	#
R1421	K7	100	#	#	100	#	#
R1424	L5	220	#	#	220	#	#
R1425	C5	220	#	#	220	#	#
S001	B9	1-692-431-21	#	#	#	#	#
S002	B9	1-692-431-21	#	#	#	#	#
S003	B9	1-692-431-21	#	#	#	#	#
S004	B9	1-692-431-21	#	#	#	#	#
S005	B10	1-692-431-21	#	#	#	#	#
S006	B10	1-692-431-21	#	#	#	#	#
S007	B10	1-692-431-21	#	#	#	#	#
T502	J15	1-424-545-11	1-424-545-11	1-424-545-11	1-429-408-11	1-429-408-11	1-429-408-11
T503	I18	8-598-969-00	8-598-969-00	8-598-969-00	8-598-809-00	8-598-809-00	8-598-809-00
T504	K18	#	#	#	1-413-059-00	1-413-059-00	1-413-059-00

#: NOT MOUNTED

A BOARD WAVEFORMS

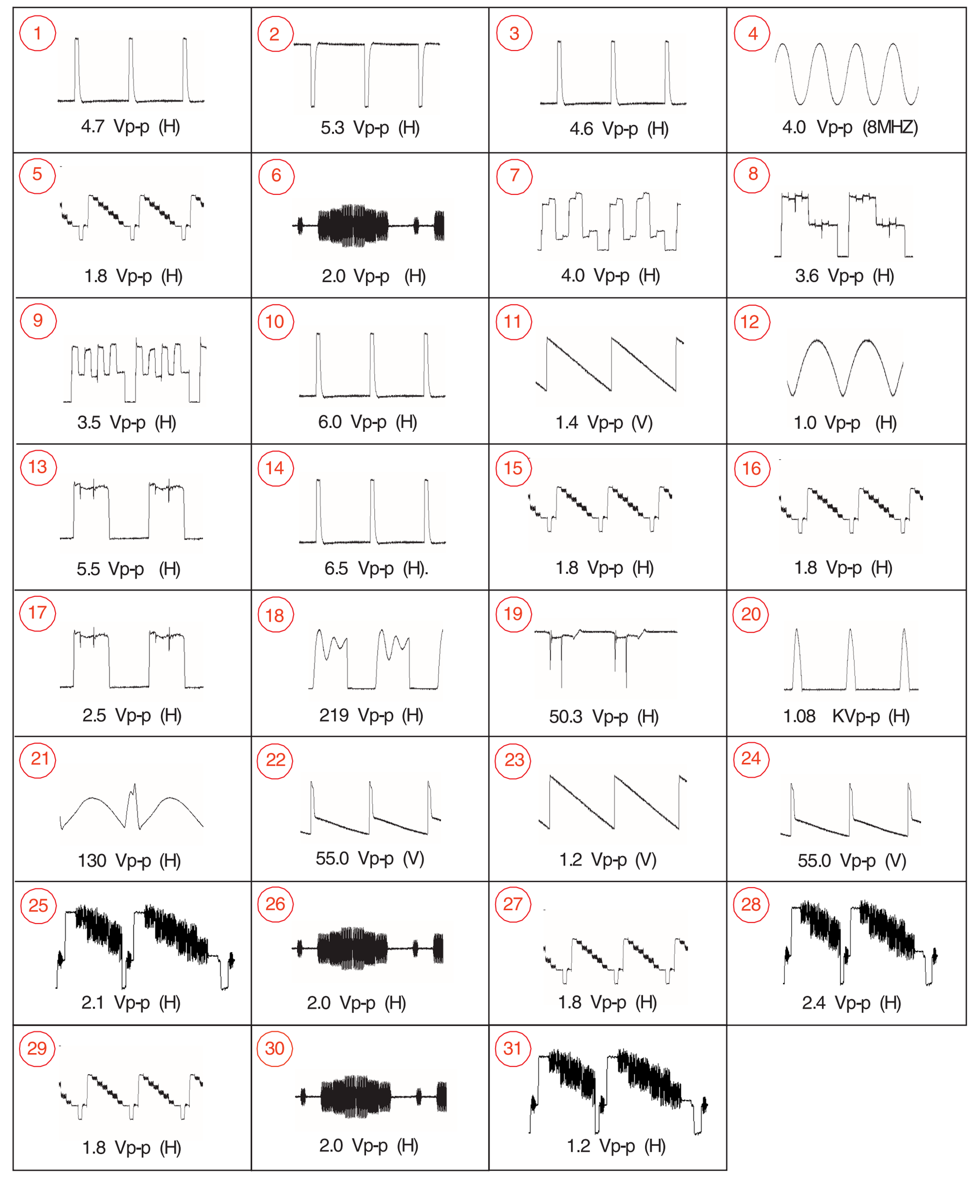

AV BOARD SCHEMATIC DIAGRAM (KV-32S66/35S66 ONLY)

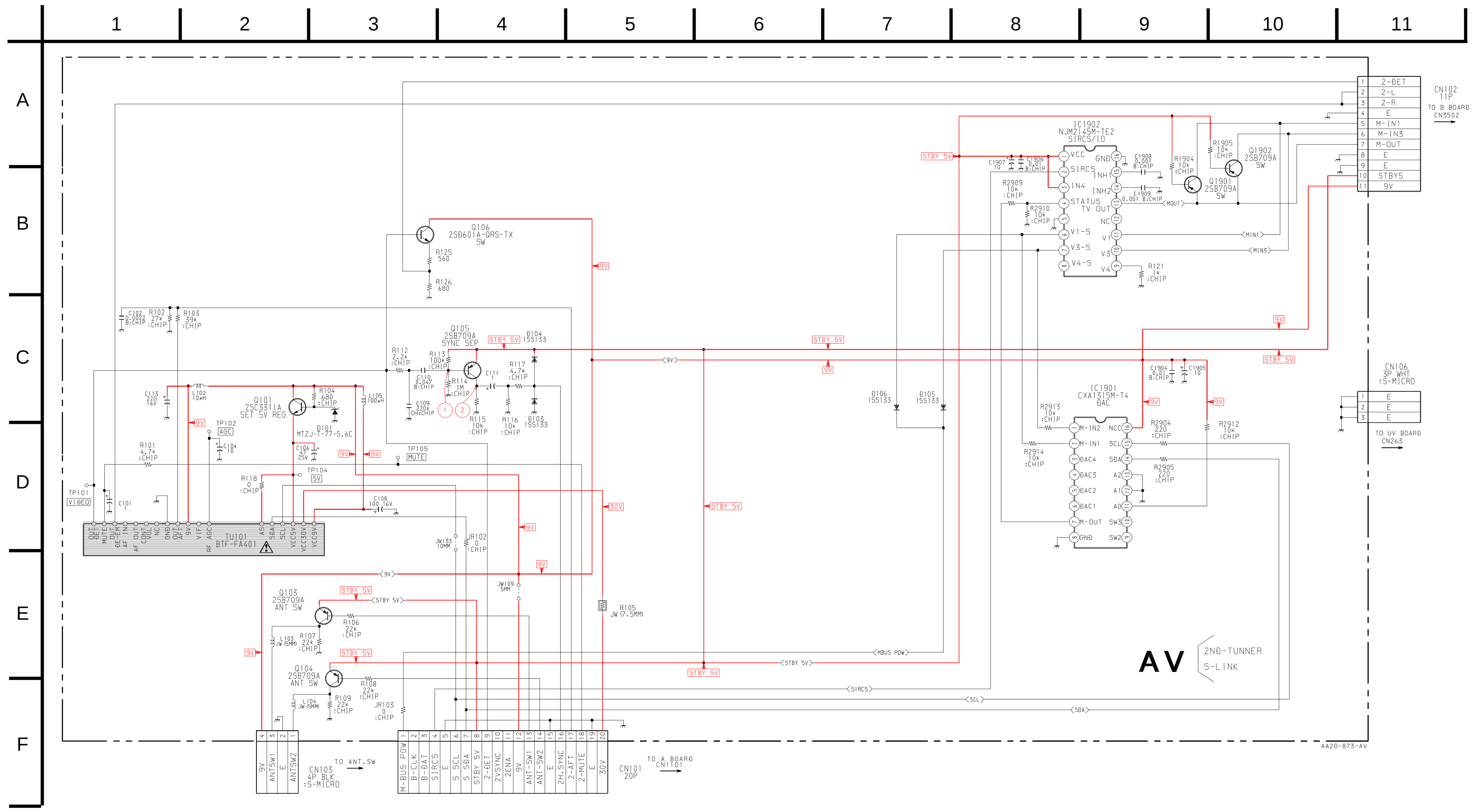

A BOARD TRANSISTOR VOLTAGE LIST

	B	C	E		B	C	E		B	C	E		B	C	E
Q001	4.9	0.7	4.8	Q015	0	0	GND	Q358	1.6	8.7	1.7	Q561	0	2.9	GND
Q002	4.2	8.7	4.8	Q017	5.7	8.8	5.0	Q461	0	22.6	0	Q562	-0.3	0	GND
Q003	-0.4	3.8	GND	Q301	4.1	4.7	4.8	Q462	22.6	0.7	22.7	Q563	135	0	135.4
Q004	0.6	GND	3.8	Q301	3.6	GND	1.6	Q501	-0.7	109	GND	Q1102	5.6	8.6	30
Q010	0	8.7	0	Q302	3.6	GND	1.7	Q502	-0.2	132.6	GND	Q1103	0	6.9	GND
Q011	0	8.7	0	Q303	3.6	GND	1.8	Q511	-15.9	-12.3	-16.1				
Q012	0	8.7	0	Q354	0.4	GND	0.2	Q512	-16.4	-30.7	-16.1				
Q013	-0.04	0	GND	Q356	4.8	GND	5.4	Q551	2.8	0	2.8				
Q014	-0.06	0	GND	Q357	3.6	8.7	2.9	Q552	0	2.8	GND				

All voltages are in V

A BOARD IC VOLTAGE LIST

IC001				IC351				IC501	
pin	volt	pin	volt	pin	volt	pin	volt	pin	volt
		32	0			32	4.2		
		33	0			33	4.6		
1	0	34	0	1	2.0	34	8.8	1	3.3
2	4.7	35	NC	2	5.3	35	3.1	2	7.6
3	NC	36	0.2	3	4.0	36	3.3	3	8.2
4	NC	37	0	4	0	37	3.9	4	-16.0
5	4.7	38	0	5	4.0	38	4.1	5	2.1
6	4	39	0	6	8.7	39	2.3	6	2.9
7	0.05	40	0	7	0	40	0	7	-15.8
8	0.04	41	0	8	4.7	41	2.6	8	11.8
9	NC	42	0	9	0.2	42	2.7	**IC561**	
10	NC	43	0	10	6.3	43	3.9	pin	volt
11	NC	44	2.6	11	6.0	44	3.3	1	1.4
12	4.7	45	2.7	12	5.9	45	5.9	2	11.8
13	3.8	46	4.7	13	GND	46	0.4	3	-13.9
14	1.1	47	4.7	14	0	47	5.8	4	-16.0
15	4.7	48	GND	15	0	48	NC	5	0.05
16	GND	49	GND	16	5.0	**IC461**		6	12.8
17	2.2	50	4.7	17	0	pin	volt	7	1.5
18	2.2	51	0	18	5.0	1	1.3	**IC003**	
19	0	52	0	19	4.0	2	0.7	pin	volt
20	4.7	53	4.7	20	2.1	3	12.4	1	4.9
21	2.9	54	4.7	21	4.4	4	0.7	2	4.9
22	2.6	55	4.7	22	1.9	5	1.3	3	GND
23	0	56	4.7	23	4.8	6	0		
24	0	57	4.7	24	1.8	7	NC		
25	GND	58	0.06	25	3.4	8	11.3		
26	1.5	59	3	26	2.5	9	22.7		
27	2.4	60	3.4	27	8.6	10	11.3		
28	2.3	61	0	28	0.6	11	NC		
29	4.7	62	4.4	29	2.9				
30	0.8	63	NC	30	2.9				
31	0	64	4.5	31	3.7				

All voltages are in V

B BOARD SCHEMATIC DIAGRAM

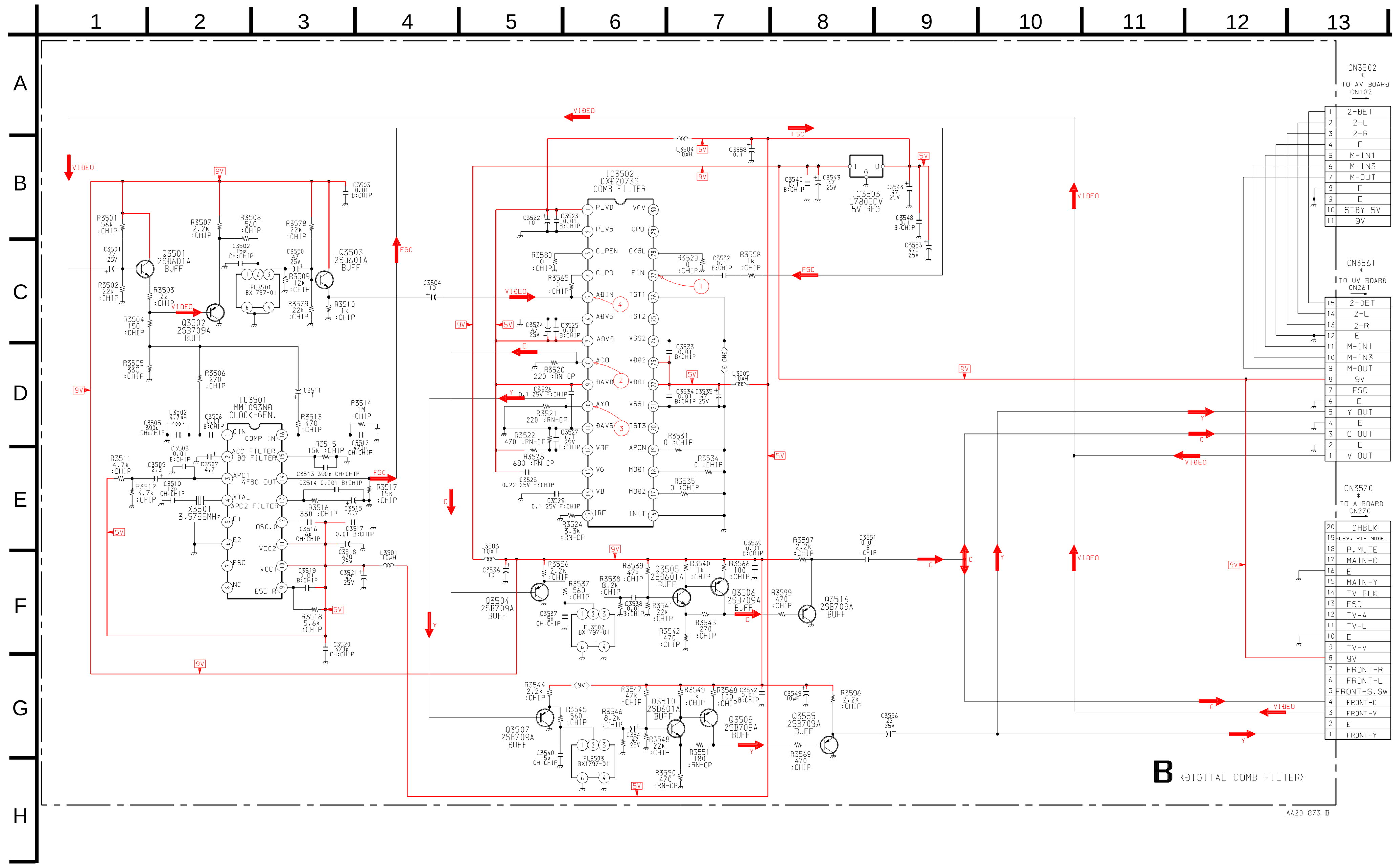

AV BOARD IC VOLTAGE LIST

IC1902	
pin	volt
1	4.9
2	4.6
3	-0.1
4	0
5	GND
6	0
7	0
8	NC
9	0
10	0
11	0
12	NC
13	0
14	0.5
15	0.5
16	GND
IC1901	
pin	volt
1	0
2	0
3	NC
4	NC
5	NC
6	NC
7	0.4
8	GND
9	NC
10	NC
11	8.6
12	GND
13	GND
14	0
15	0
16	8.6

All voltages are in V

AV BOARD LOCATION LIST

DIODE		TRANSISTOR	
D101	C2	Q101	C1
D103	D2	Q103	C5
D104	D2	Q104	C5
D105	D3	Q105	C3
D106	D3	Q106	B3
IC		Q1901	D3
IC1901	E3	Q1902	D3
IC1902	D2		

AV BOARD WAVEFORMS

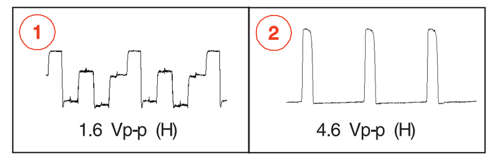

AV BOARD TRANSISTOR VOLTAGE LIST

	B	C	E
Q101	4.6	8.6	4.0
Q103	4.2	4.7	4.9
Q104	5.0	0	4.9
Q105	5.1	0.8	4.9
Q860	0.68	0.2	0
Q862	0.7	0.05	0
Q864	2.9	4.9	2.4
Q1901	4.9	0	0
Q1902	-0.1	0	0
Q1904	5.2	0.8	4.9

All voltages are in V

B BOARD TRANSISTOR VOLTAGE LIST

	B	C	E
Q3501	2.1	8.7	1.4
Q3502	1.4	GND	2.0
Q3503	4.2	8.8	3.5
Q3504	1.1	GND	1.7
Q3505	2.7	7.8	2.1
Q3506	7.8	3.0	8.4
Q3507	1.0	GND	1.7
Q3509	7.8	2.9	8.4
Q3510	2.7	7.8	2.1
Q3516	3.0	GND	3.7
Q555	2.7	GND	3.4

All voltages are in V

B BOARD IC VOLTAGE LIST

IC3501		IC3502			
pin	volt	pin	volt	pin	volt
				18	0
				19	0
1	3.5	1	5.0	20	NC
2	0	2	GND	21	GND
3	0	3	0	22	5.0
4	0	4	1.5	23	5.0
5	GND	5	1.5	24	GND
6	GND	6	0	25	NC
7	NC	7	5.0	26	GND
8	NC	8	1.1	27	2.3
9	0	9	5.0	28	5.0
10	5.0	10	1.1	29	2.2
11	5.0	11	0	30	2.2
12	3.3	12	2.0	**IC3503**	
13	2.4	13	2.7	pin	volt
14	3.0	14	0.9	1	NC
15	0.7	15	2.0	2	8.8
16	0	16	GND	3	0
		17	0	4	GND
				5	GND

All voltages are in V

B BOARD WAVEFORMS

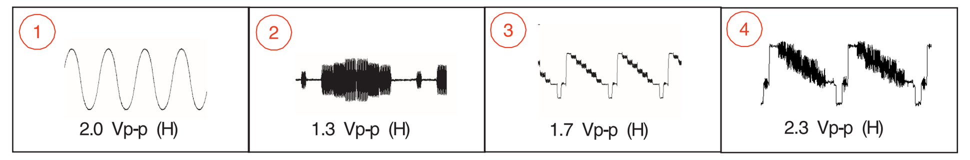

B BOARD MARK (*) LIST

REF. NO.	LOC	KV-32V42/35V42	KV-32S66/35S66	KV-32S42/35V42
CN3502	B13	1-573-978-21	#	#
CN3561	D13	1-691-616-21	1-691-616-21	#
CN3570	F13	#	#	1-573-301-21

#: NOT MOUNTED

AV [SECOND TUNER, S-LINK] (KV-32S66/35S66 ONLY)

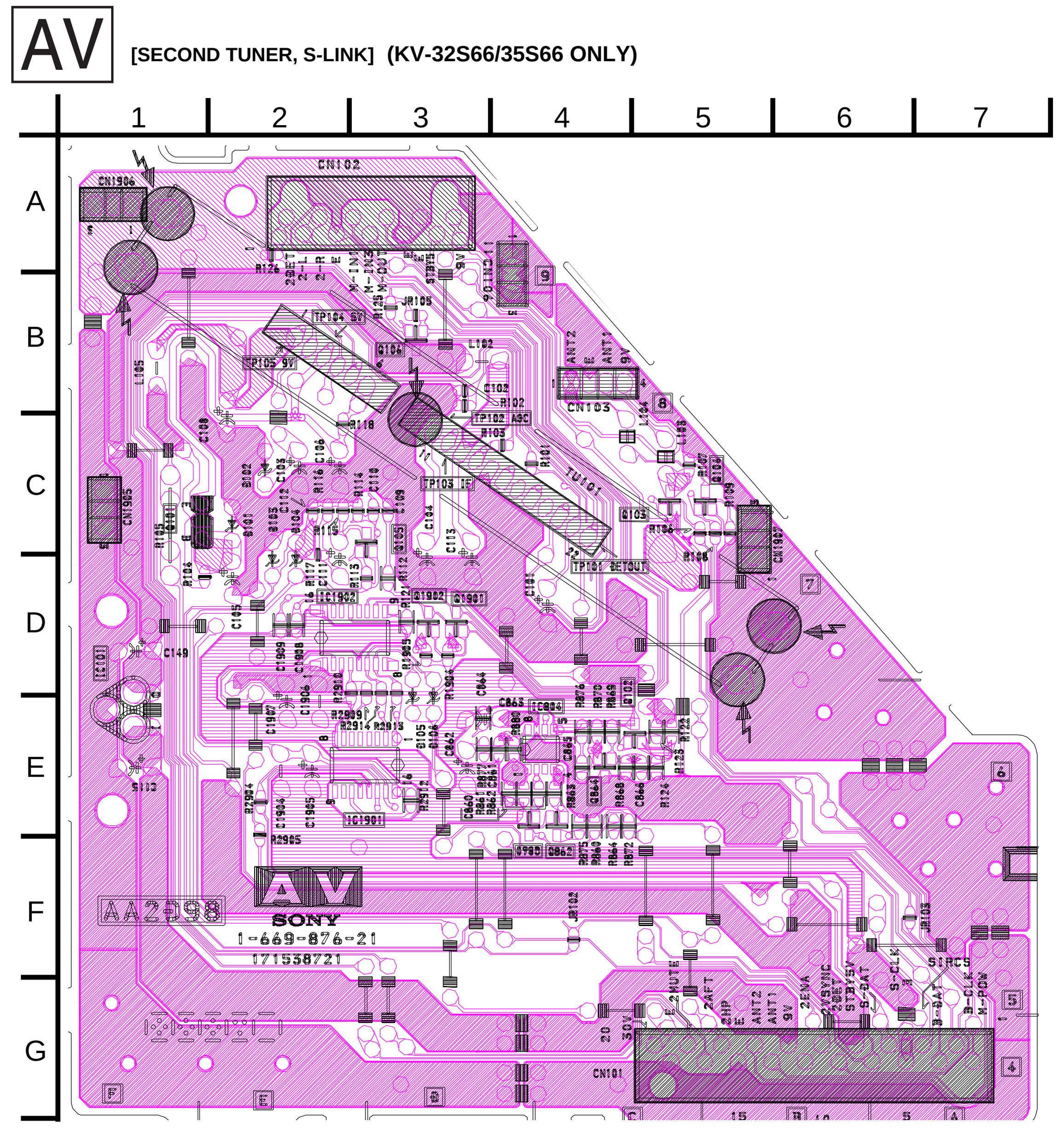

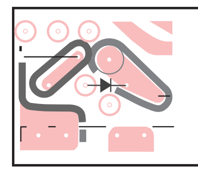

NOTE:
Portions of the circuit marked as shown are high voltage areas. Use care to prevent electric shocks during inspection or repair.

B [DIGITAL COMB FILTER]

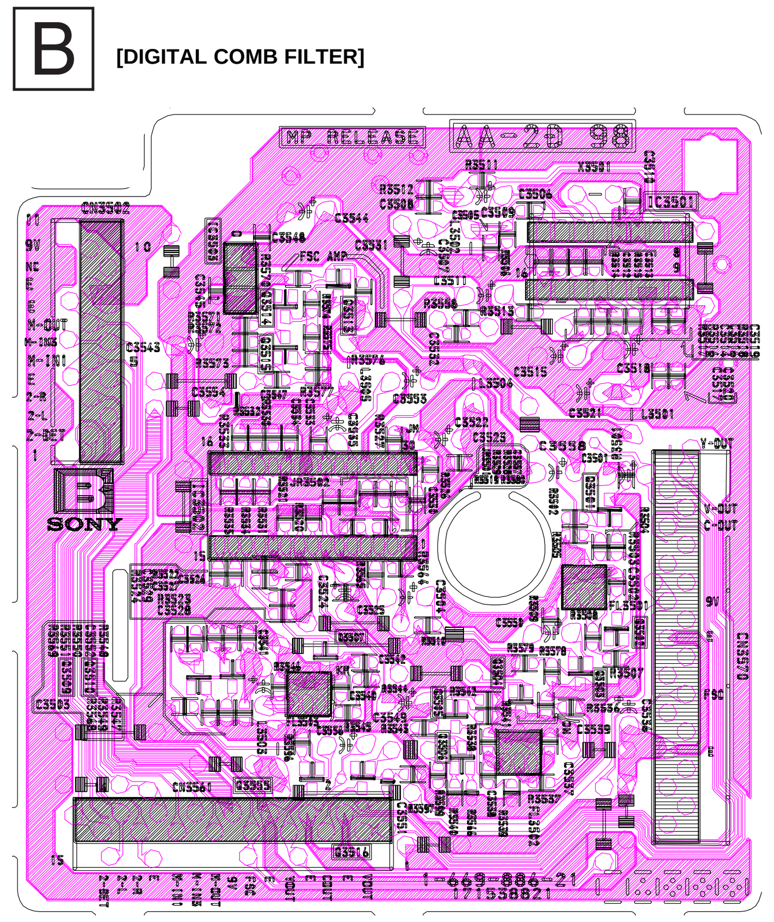

C BOARD SCHEMATIC DIAGRAM

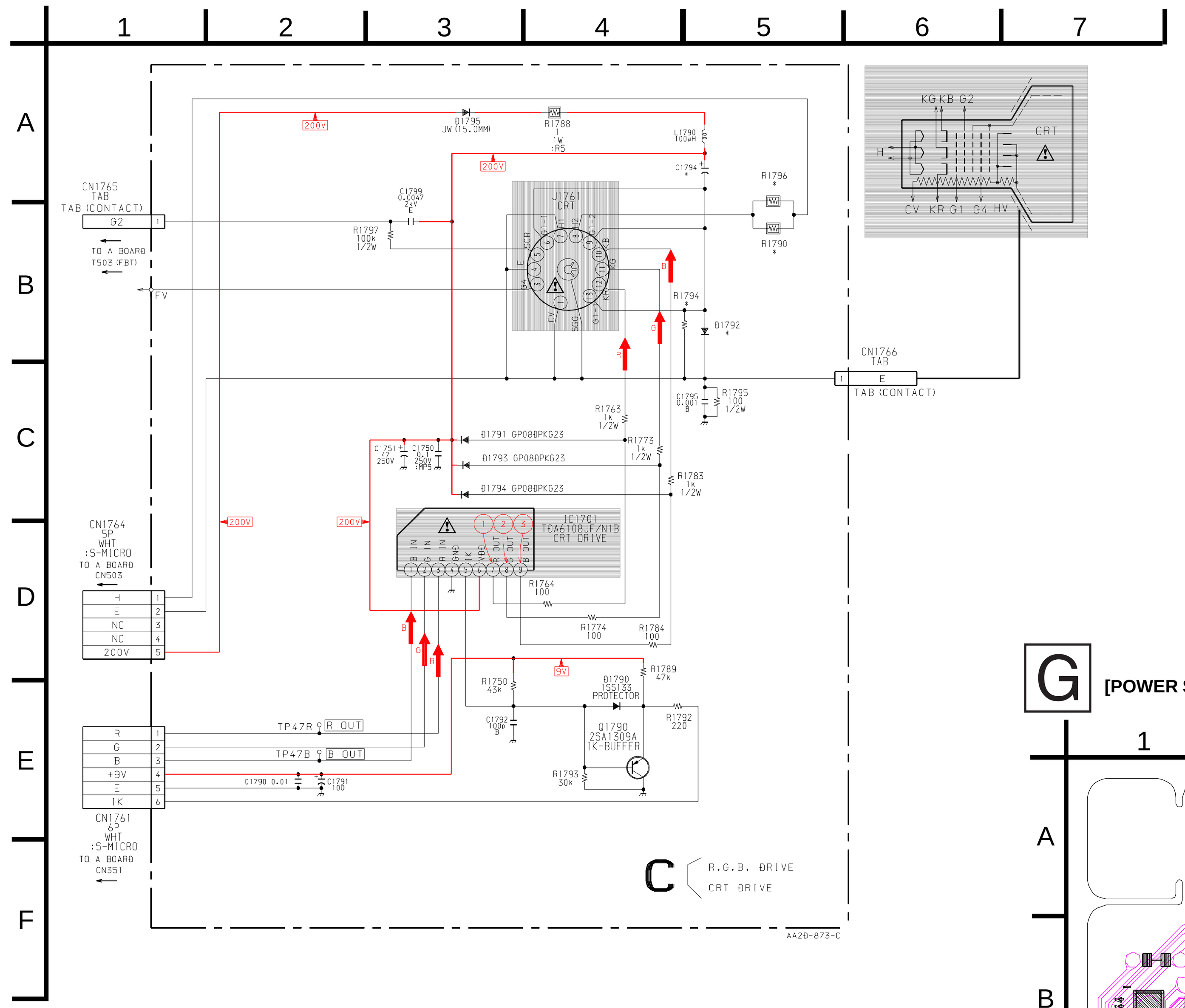

C BOARD WAVEFORMS

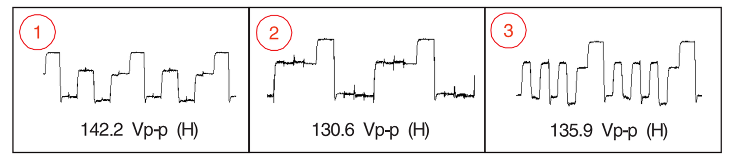

C BOARD IC VOLTAGE LIST

IC1701	
pin	volt
1	1.8
2	1.9
3	2.1
4	GND
5	5.5
6	203.1
7	136.7
8	146.2
9	1.1

All voltages are in V

C BOARD MARK (*) LIST

REF. NO.	LOC	32S42/S66/V42	35S42/S66/V42
C1794	A5	#	4.7MF
D1792	B5	#	GP08D
R1790	B5	5.6	1
R1794	B4	#	560K
R1796	A5	5.6	1

#: NOT MOUNTED

C BOARD TRANSISTOR VOLTAGE LIST

	B	C	E
Q1790	5.4	GND	4.9

All voltages are in V

G BOARD LOCATOR LIST

DIODE			
D600	E3	D644	C4
D601	E1	D645	C5
D602	H3	D646	C4
D603	H4	D647	C2
D604	G4	D648	C5
D612	D3	D649	A3
D613	D3	D650	A2
D614	A5	**IC**	
D621	F3	IC601	G4
D622	G2	IC622	D1
D623	F2	IC641	B2
D624	F2	IC643	D3
D625	F2	**TRANSISTOR**	
D626	G2	Q621	G2
D627	F2	Q622	G2
D628	D2	Q644	E1
D641	B3	Q645	D2
D642	C4	Q646	D1
D643	C5	Q647	D2
		Q648	A4

G BOARD IC VOLTAGE LIST

IC601	
pin	volt
C1	151.4
C2	300.8
B1	149.0
B2	-1.75
E1	GND
E2	151.2
IC641	
pin	volt
IN	11.1
OUT	8.9
G	GND
IC643	
pin	volt
1	134.0
2	NC
3	2.4
4	8.5
5	GND

All voltages are in V

G BOARD TRANSISTOR VOLTAGE LIST

	B	C	E
Q622	0.5	1.75	GND
Q644	0	11.1	GND
Q645	11.1	GND	8.5
Q646	6.0	6.7	6.7
Q647	0	11.1	GND
Q648	0.7	0.04	GND

All voltages are in V

G BOARD TRANSISTOR VOLTAGE LIST

	S	D	G
Q621	0	152.4	1.75

All voltages are in V

G BOARD MARK (*) LIST

REF. NO.	LOC	KV-35S42/S66/V42	KV-32S42/S66/V42
C601	E3	0.22µF	#
CN601	E2	1-573-963-11	#
CN603	E2	1-573-963-11	#
CN604	F2	#	1-508-765-00

#: NOT MOUNTED

C [RGB DRIVE, CRT DRIVE]

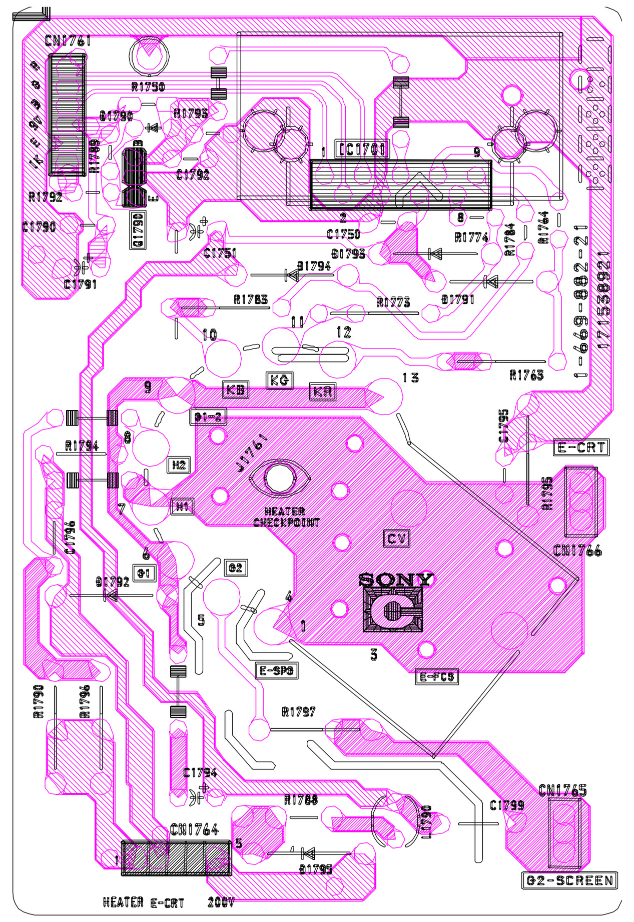

G [POWER SUPPLY]

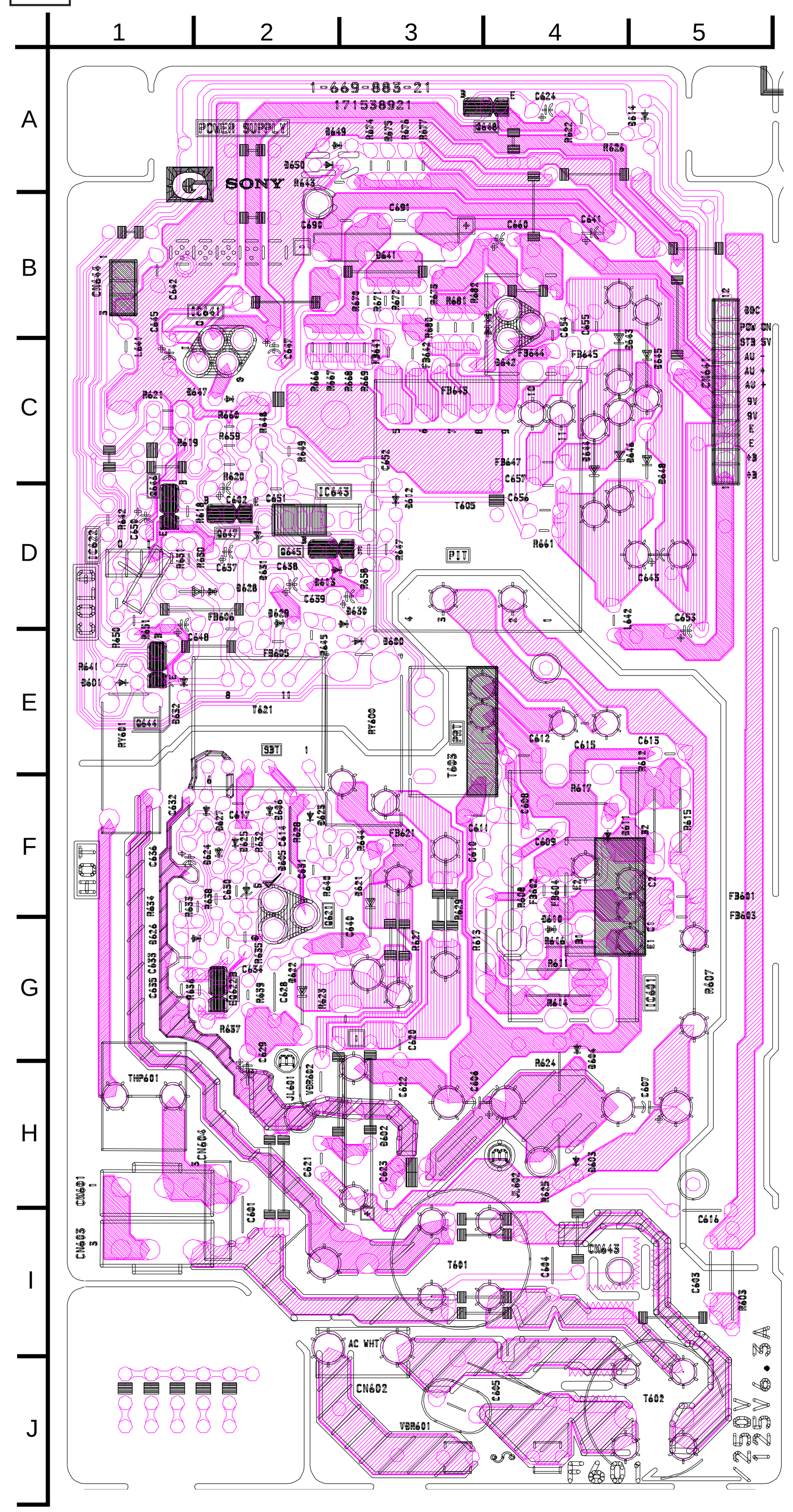

G BOARD SCHEMATIC DIAGRAM

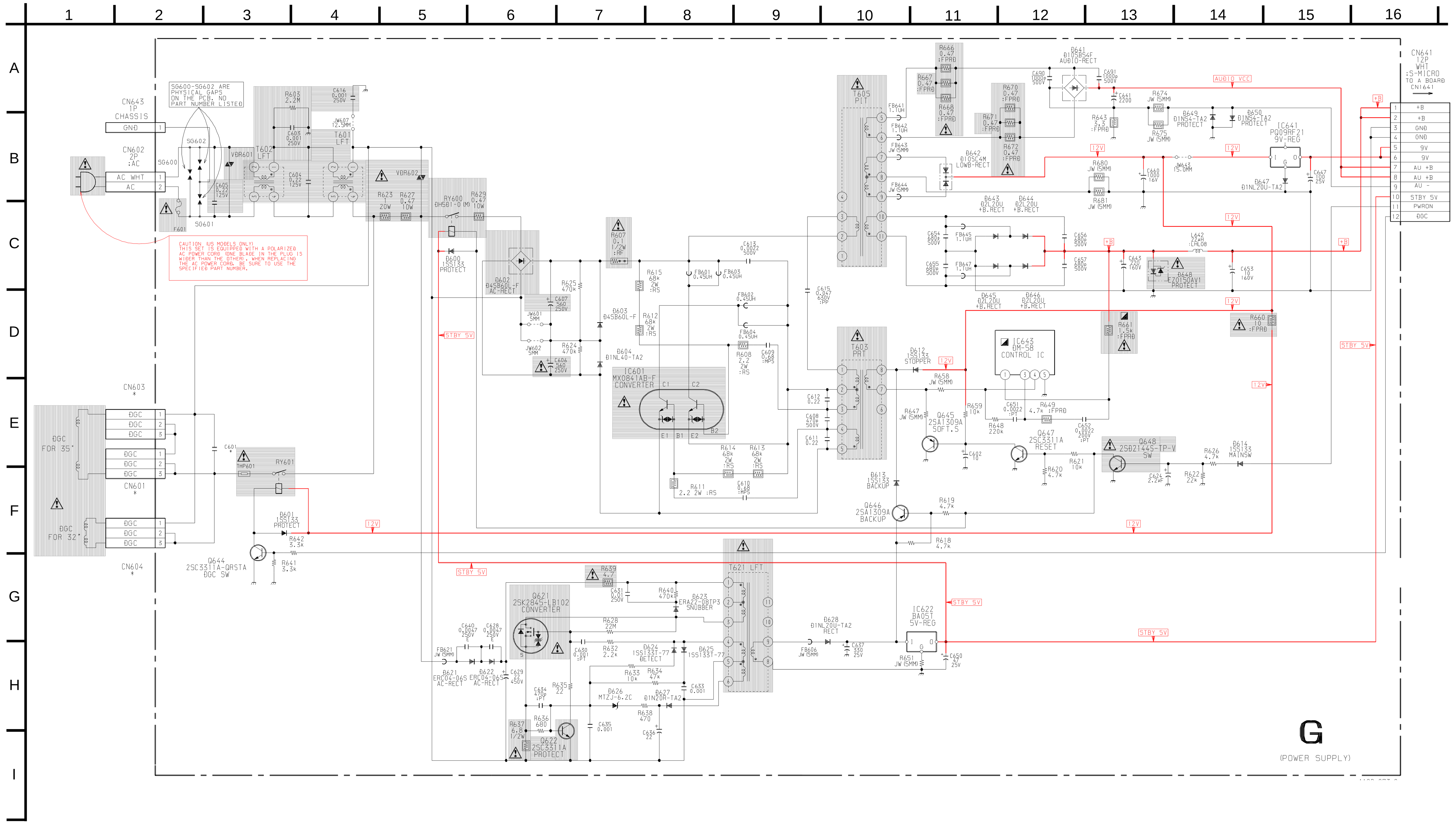

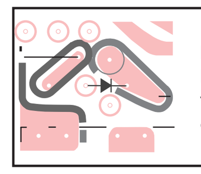

NOTE:
Portions of the circuit marked as shown are high voltage areas. Use care to prevent electric shocks during inspection or repair.

← B AV Boards C G Boards →

HV BOARD SCHEMATIC DIAGRAM (KV-32V42/35S42/35S66/35V42 ONLY)

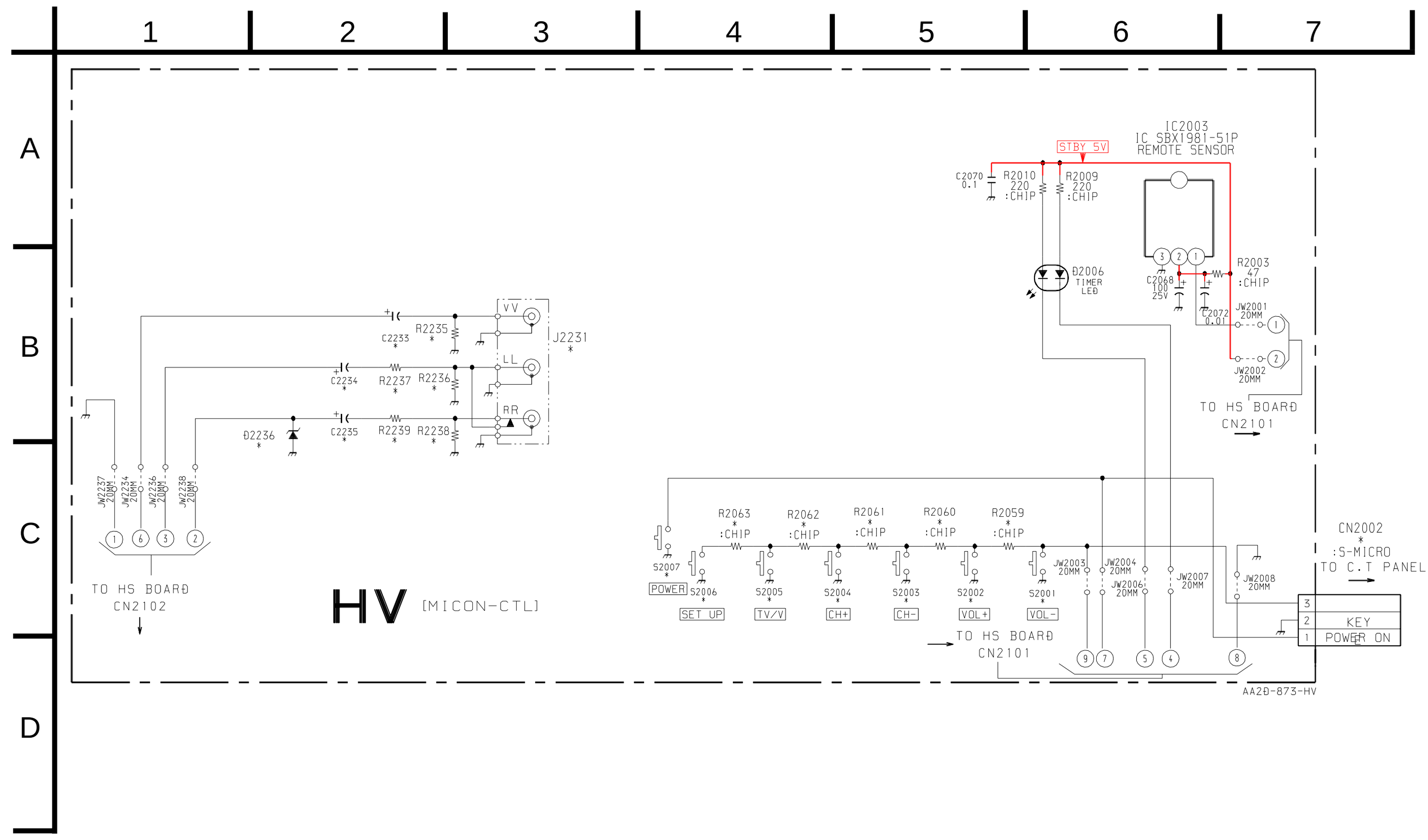

HV BOARD MARK (*) LIST

REF. NO.	LOC	KV-32V42/35V42	KV-35S66/35S42
C2233	B2	0.047μF	#
C2234	B2	1μF	#
C2235	B2	1μF	#
CN2002	C7	1-564-518-11 (3P)	#
D2236	B2	RD10ESB2	#
J2231	B3	1-691-110-11 (3P)	#
R2059	C5	#	820
R2060	C5	#	1K
R2061	C5	#	1.8K
R2062	C4	#	4.7K
R2063	C4	#	10K
R2235	B2	75	#
R2236	B2	470K	#
R2237	B2	4.7K	#
R2238	B2	470K	#
R2239	B2	4.7K	#
S2001	C6	1-692-431-21	#
S2002	C5	1-692-431-21	#
S2003	C5	1-692-431-21	#
S2004	C5	1-692-431-21	#
S2005	C4	1-692-431-21	#
S2006	C4	1-692-431-21	#
S2007	C4	1-692-431-21	#

#: NOT MOUNTED

HV BOARD IC VOLTAGE LIST

IC2003	
pin	volt
1	4.9
2	4.9
3	GND

All voltages are in V

HV [MICON-CTL] (KV-32V42/35S42/35S66/35V42 ONLY)

HS [MICON-CTL] (KV-32S66/32V42/35S42/35S66/35V42 ONLY)

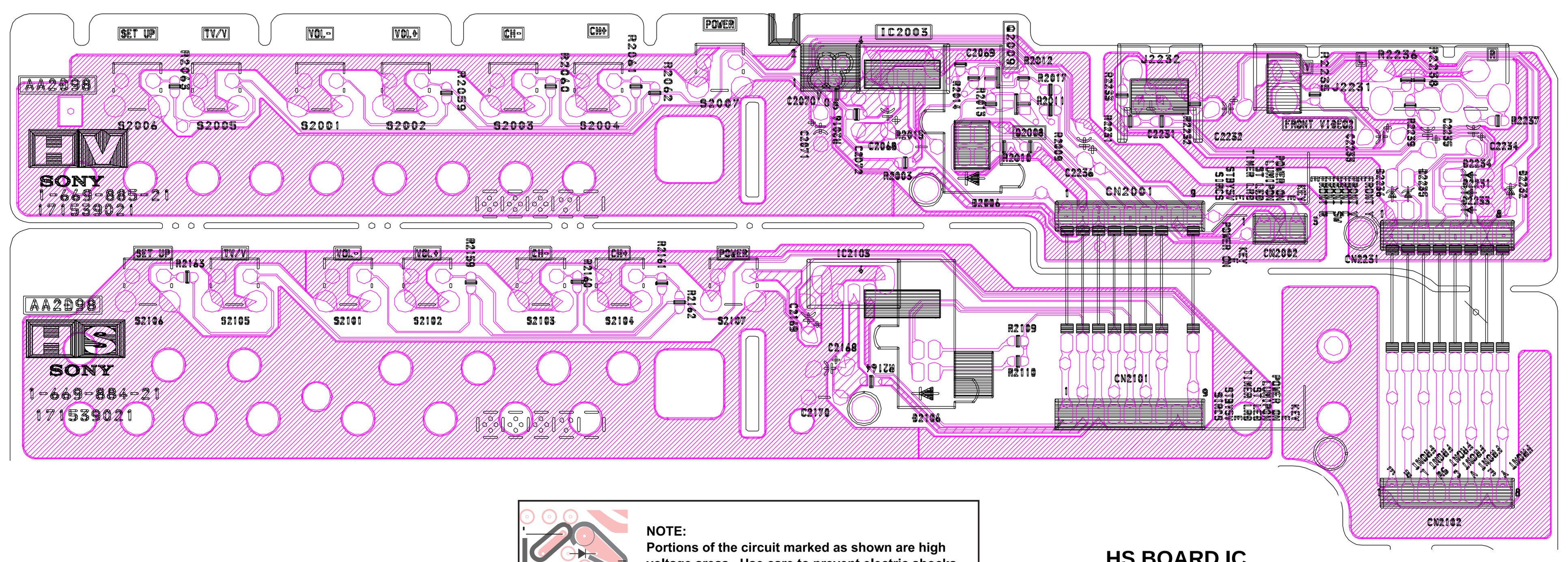

NOTE:
Portions of the circuit marked as shown are high voltage areas. Use care to prevent electric shocks during inspection or repair.

HS BOARD SCHEMATIC DIAGRAM (KV-32S66/32V42/35S42/35S66/35V42 ONLY)

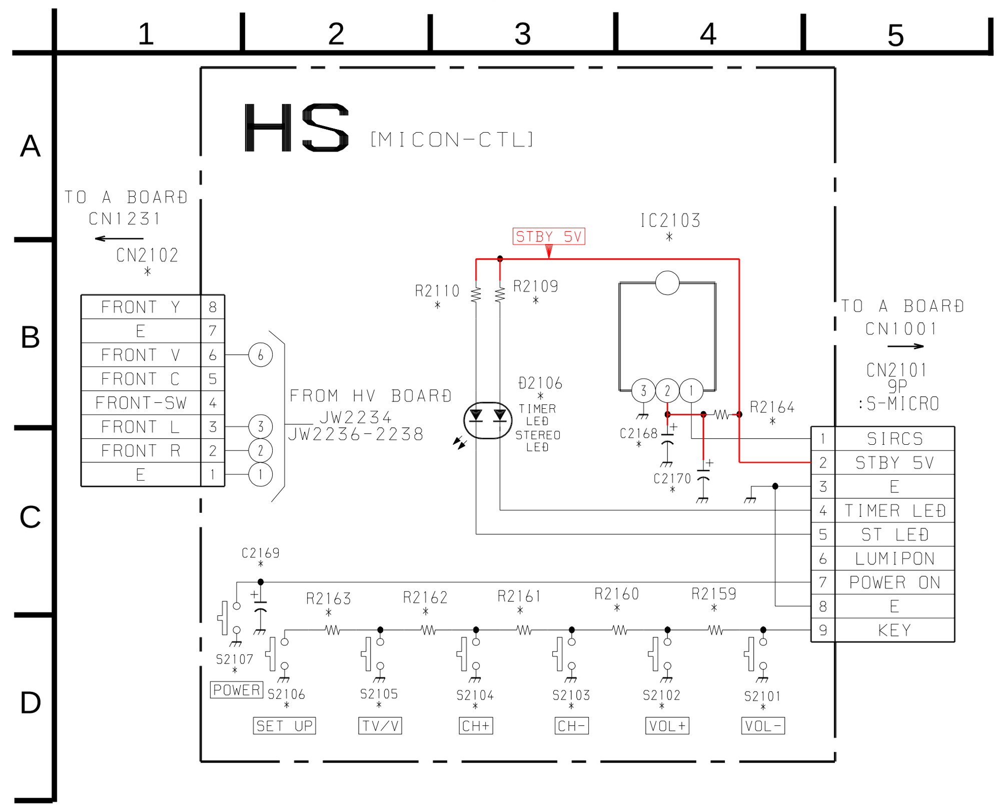

HS BOARD IC VOLTAGE LIST

IC2103	
pin	volt
1	4.9
2	4.9
3	GND

All voltages are in V

HS BOARD MARK (*) LIST

REF. NO.	LOC	KV-32S66	KV-32V42/35V42	KV-35S42/S66
C2168	B4	100MF	#	#
C2169	C2	0.47MF	#	#
C2170	C4	0.01MF	#	#
CN2102	B1	1-564-523-11 (8P)	1-564-523-11 (8P)	#
D2106	B3	1-810-039-11	#	#
IC2103	A4	SBX1981-51P	#	#
R2109	B3	220	#	#
R2110	B3	220	#	#
R2159	C4	820	#	#
R2160	C3	1K	#	#
R2161	C3	1.8K	#	#
R2162	C2	4.7K	#	#
R2163	C2	10K	#	#
R2164	B4	47	#	#
S2101	D4	1-692-431-21	#	#
S2102	D4	1-692-431-21	#	#
S2103	D3	1-692-431-21	#	#
S2104	D3	1-692-431-21	#	#
S2105	D2	1-692-431-21	#	#
S2106	D2	1-692-431-21	#	#
S2107	D1	1-692-431-21	#	#

#: NOT MOUNTED

P BOARD SCHEMATIC DIAGRAM (KV-32S66/35S66 ONLY)

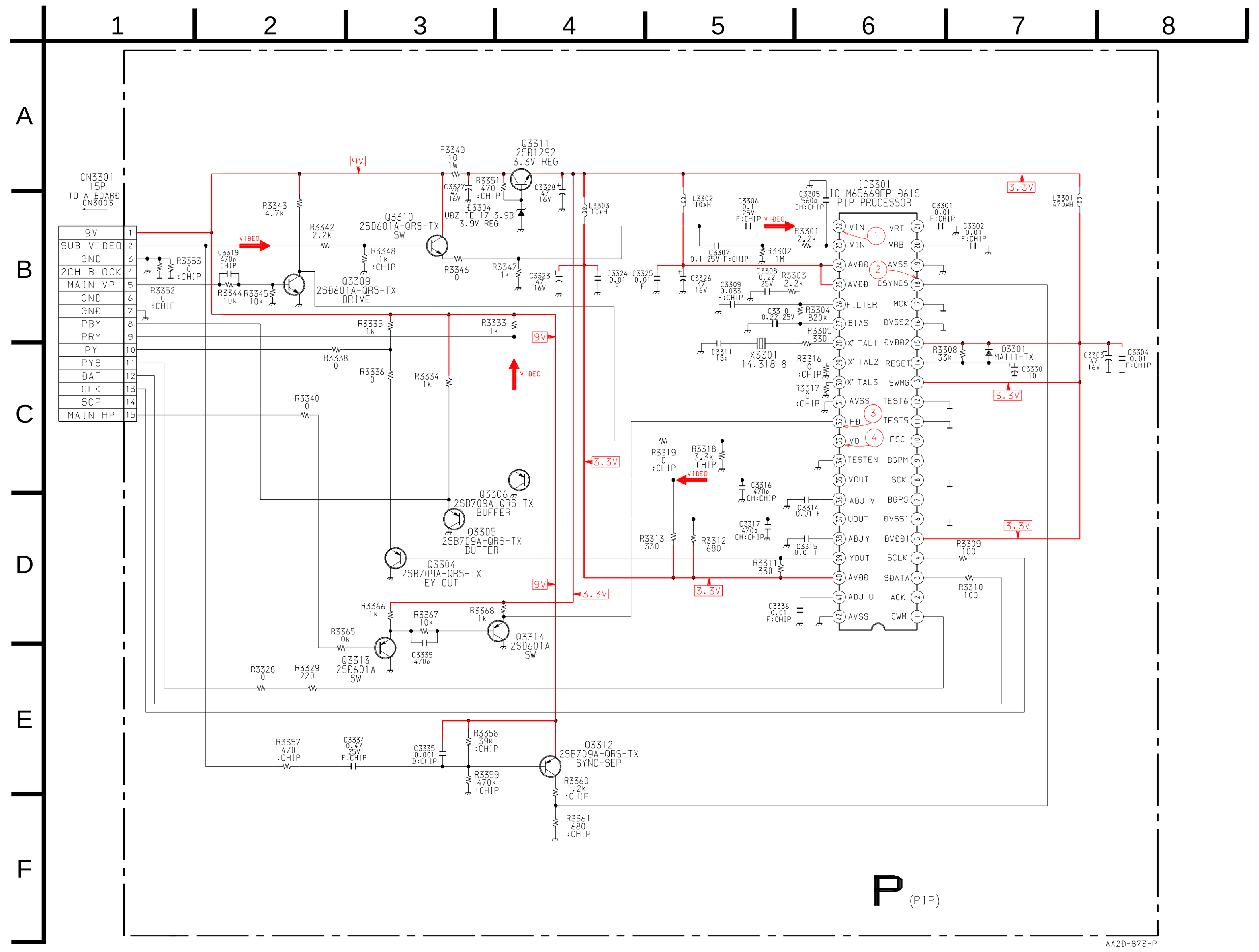

P BOARD IC VOLTAGE LIST

IC3302		IC3304	
pin	volt	pin	volt
1	8.6	1	2.2
2	4.9	2	3.9
3	GND	3	8.6
IC3303		4	1.7
pin	volt	5	GND
1	GND	6	2.8
2	2.9	7	2.8
3	2.4	8	2.8
4	2.4	9	NC
5	4.9	10	0.4
6	GND	11	3.8
7	0.4	12	4.1
8	0	13	4.2
9	0	14	0.1
10	0	15	NC
11	1.9	16	0.6
12	0	17	GND
13	NC	18	3.3
14	-2.9	19	2.8
15	GND	20	2.8
16	GND	21	NC
17	0.6	22	NC
18	0.3	23	NC
19	0	24	NC
20	0.5	25	8.6
21	4.7	26	2.3
22	4.8	27	NC
23	NC	28	NC
24	NC	29	4.9
25	GND	30	NC
26	NC	31	GND
27	GND	32	GND
28	2.1	33	4.0
29	4.9	34	4.7
30	2.2	35	GND
31	3.9	36	4.8
32	2.2	37	4.7
		38	3.7
		39	2.5
		40	2.6

All voltages are in V

P BOARD WAVEFORMS

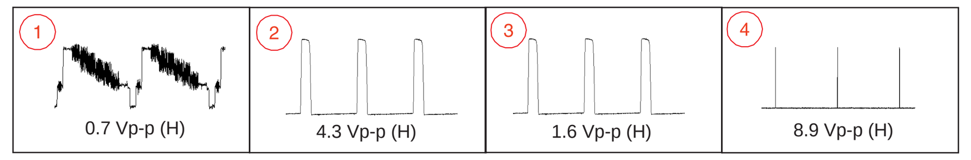

P [P in P ENCODE] (KV-32S66/35S66 ONLY)

<COMPONENT SIDE>

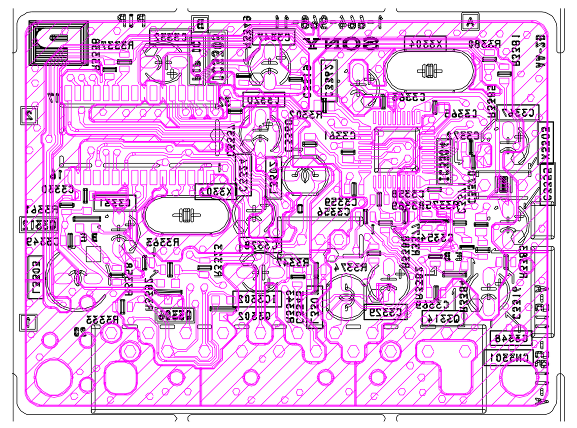

<CONDUCTOR SIDE>

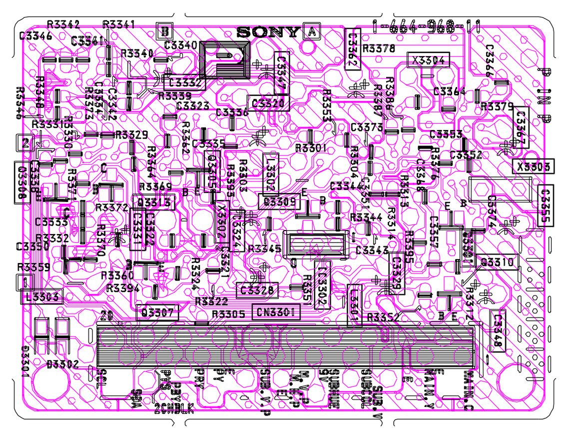

P BOARD TRANSISTOR VOLTAGE LIST

	B	C	E
Q3301	5.1	8.6	4.5
Q3302	0	GND	0.6
Q3306	0.6	GND	1.3
Q3310	0	4.9	GND
Q3312	0.2	0	0.7
Q3314	4.5	GND	5.1

All voltages are in V

WA BOARD SCHEMATIC DIAGRAM (KV-35S42/35S66/35V42 ONLY)

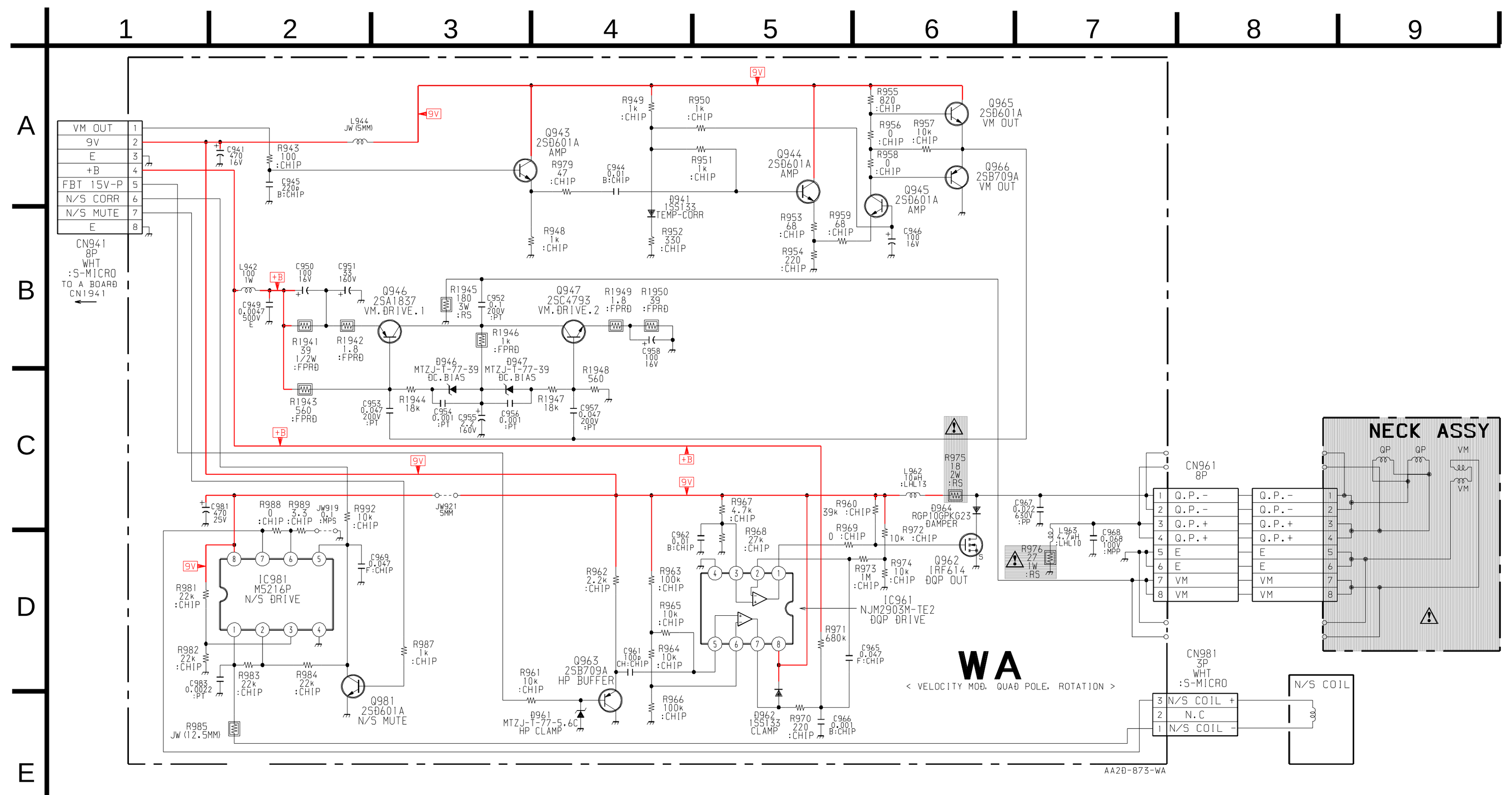

WA BOARD TRANSISTOR VOLTAGE LIST

	B	C	E
Q943	5.1	8.7	2.3
Q944	0	8.7	2.0
Q945	0.6	5.6	2.0
Q946	133.7	67.2	134.2
Q947	0.9	67.3	0.4
Q963	4.5	GND	5.1
Q965	5.6	8.7	5.6
Q966	5.6	GND	5.6
Q981	0	3.7	GND

All voltages are in V

WA BOARD TRANSISTOR VOLTAGE LIST

	D	G	S
Q962	11.2	3.7	GND

All voltages are in V

WA [VELOCITY MOD, QUAD POLE, ROTATION] (KV-35S42/35S66/35V42 ONLY)

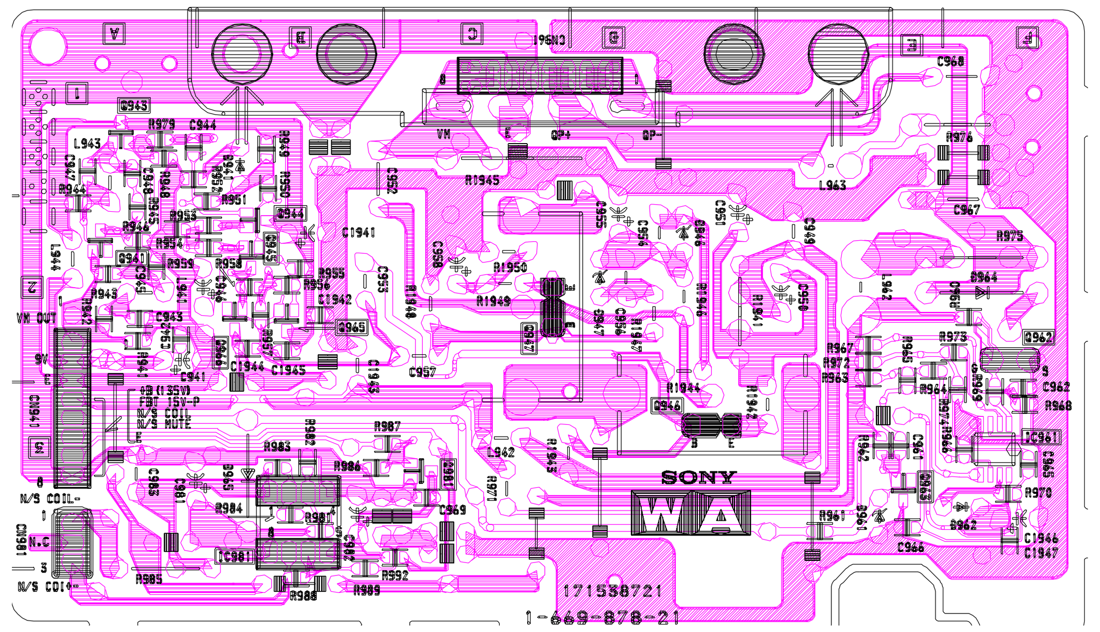

WB BOARD SCHEMATIC DIAGRAM (KV-32S42/32S66/32V42 ONLY)

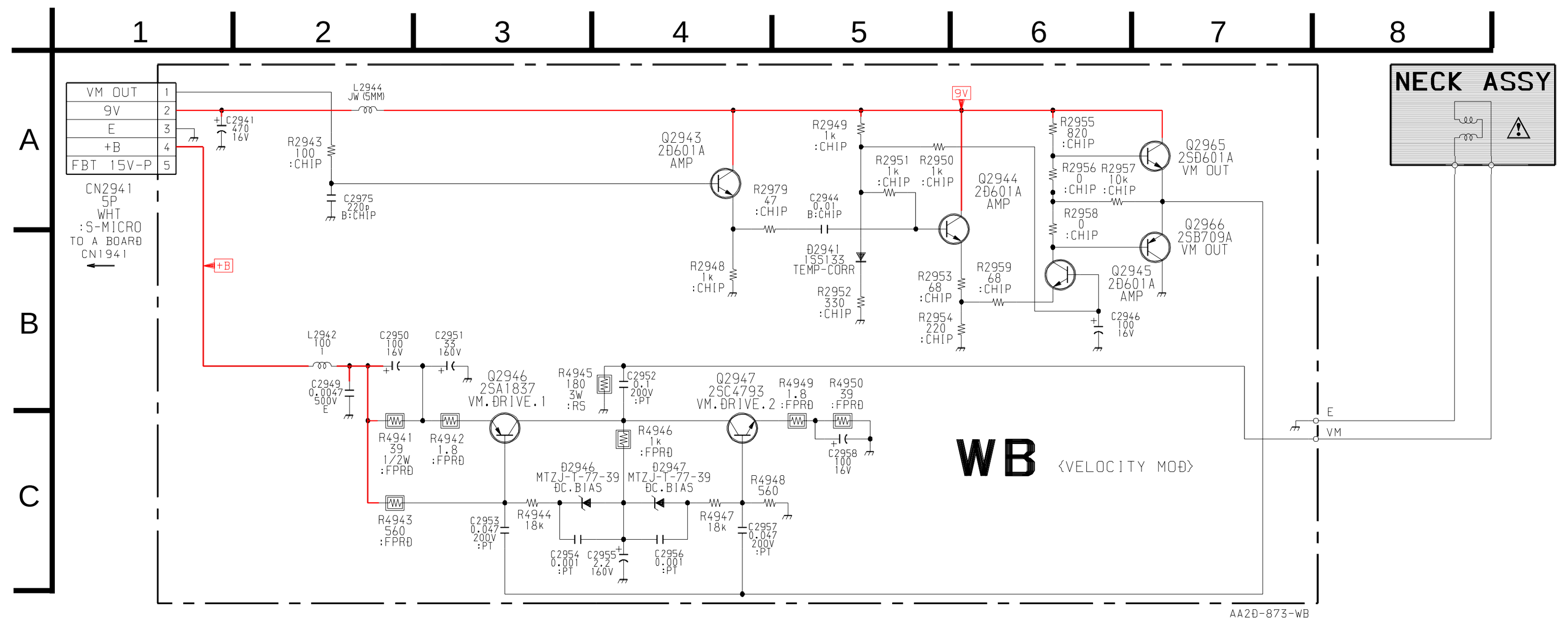

WA BOARD IC VOLTAGE LIST

IC961	
pin	volt
1	3.7
2	4
3	7.5
4	GND
5	4.6
6	4.2
7	4.6
8	8.7
IC981	
pin	volt
1	5.0
2	4.2
3	4.4
4	GND
5	3.7
6	3.7
7	3.7
8	8.7

All voltages are in V

WB [VELOCITY MOD] (KV-32S42/32S66/32V42 ONLY)

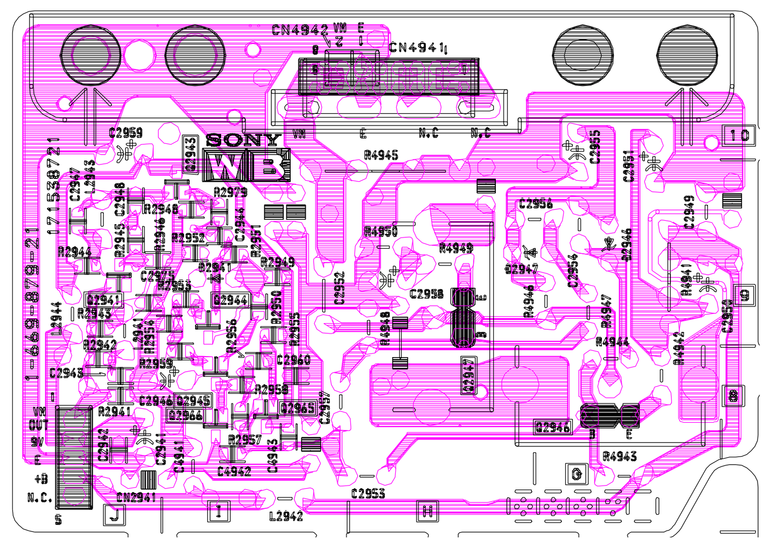

WB BOARD TRANSISTOR VOLTAGE LIST

	B	C	E		B	C	E		B	C	E		B	C	E
Q2943	3.0	8.9	2.4	Q2945	2.7	5.7	2.0	Q2947	0.9	67.5	0.4	Q2966	5.7	GND	5.7
Q2944	2.6	8.9	2.0	Q2946	133.5	67.5	134.1	Q2965	5.7	8.9	5.7				

All voltages are in V

UV BOARD SCHEMATIC DIAGRAM (KV-32S66/32V42/35S66/35V42 ONLY)

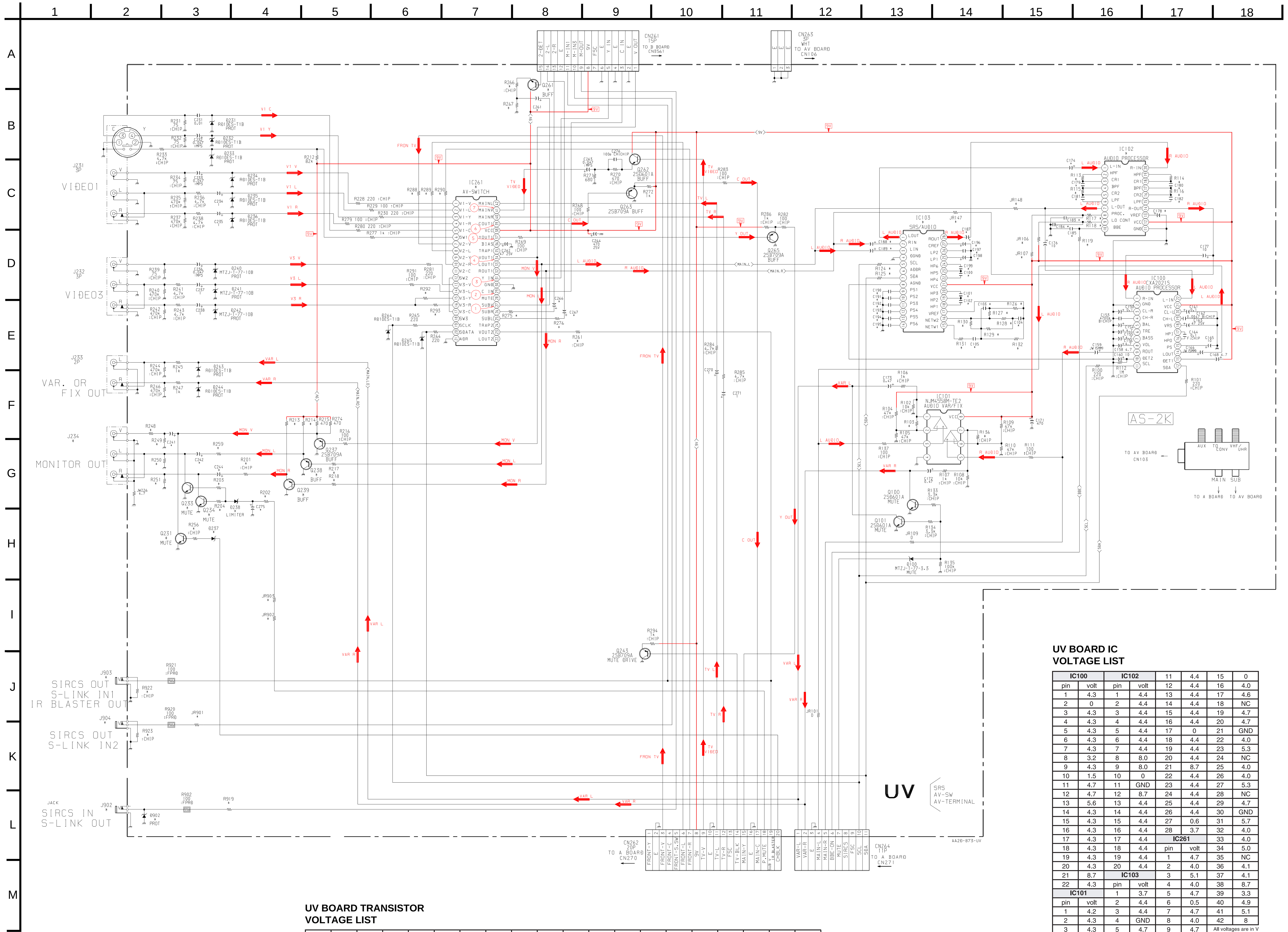

UV BOARD TRANSISTOR VOLTAGE LIST

	B	C	E		B	C	E		B	C	E		B	C	E		B	C	E
Q100	0.2	0	GND	Q233	-0.1	0	GND	Q237	4.9	GND	5.6	Q241	4.1	GND	4.9	Q262	5.1	8.7	4.3
Q101	0.2	0	GND	Q234	-0.2	0	GND	Q238	3.9	GND	4.6	Q242	4.2	GND	4.9	Q263	3.3	GND	3.9
Q231	-0.3	5.6	GND	Q235	0	0	GND	Q239	3.9	GND	4.6	Q243	0	GND	0.7	Q265	4.2	GND	4.9
Q232	0.2	4.9	GND	Q236	0	0	GND	Q240	4.1	GND	4.9	Q261	4.6	8.7	3.9				

All voltages are in V

UV BOARD IC VOLTAGE LIST

IC100		IC102		11	4.4	15	0
pin	volt	pin	volt	12	4.4	16	4.0
1	4.3	1	4.4	13	4.4	17	4.6
2	0	2	4.4	14	4.4	18	NC
3	4.3	3	4.4	15	4.4	19	4.7
4	4.3	4	4.4	16	4.4	20	4.7
5	4.3	5	4.4	17	0	21	GND
6	4.3	6	4.4	18	4.4	22	4.0
7	4.3	7	4.4	19	4.4	23	5.3
8	3.2	8	8.0	20	4.4	24	NC
9	4.3	9	8.0	21	8.7	25	4.0
10	1.5	10	0	22	4.4	26	4.0
11	4.7	11	GND	23	4.4	27	5.3
12	4.7	12	8.7	24	4.4	28	NC
13	5.6	13	4.4	25	4.4	29	4.7
14	4.3	14	4.4	26	4.4	30	GND
15	4.3	15	4.4	27	0.6	31	5.7
16	4.3	16	4.4	28	3.7	32	4.0
17	4.3	17	4.4	IC261		33	4.0
18	4.3	18	4.4	pin	volt	34	5.0
19	4.3	19	4.4	1	4.7	35	NC
20	4.3	20	4.4	2	4.0	36	4.1
21	8.7	IC103		3	5.1	37	4.1
22	4.3	pin	volt	4	4.0	38	8.7
IC101		1	3.7	5	4.7	39	3.3
pin	volt	2	4.4	6	0.5	40	4.9
1	4.2	3	4.4	7	4.7	41	5.1
2	4.3	4	GND	8	4.0	42	8
3	4.3	5	4.7	9	4.7		
4	0	6	NC	10	4.0		
5	4.3	7	4.7	11	4.7		
6	4.3	8	0	12	4.6		
7	4.2	9	4.4	13	4.7		
8	8.7	10	4.4	14	4.0		

All voltages are in V

← HS HV P WA WB Boards UV Board →

UV [SRS, AV-SW, AV-TERMINAL] (KV-32S66/32V42/35S66/35V42 ONLY)

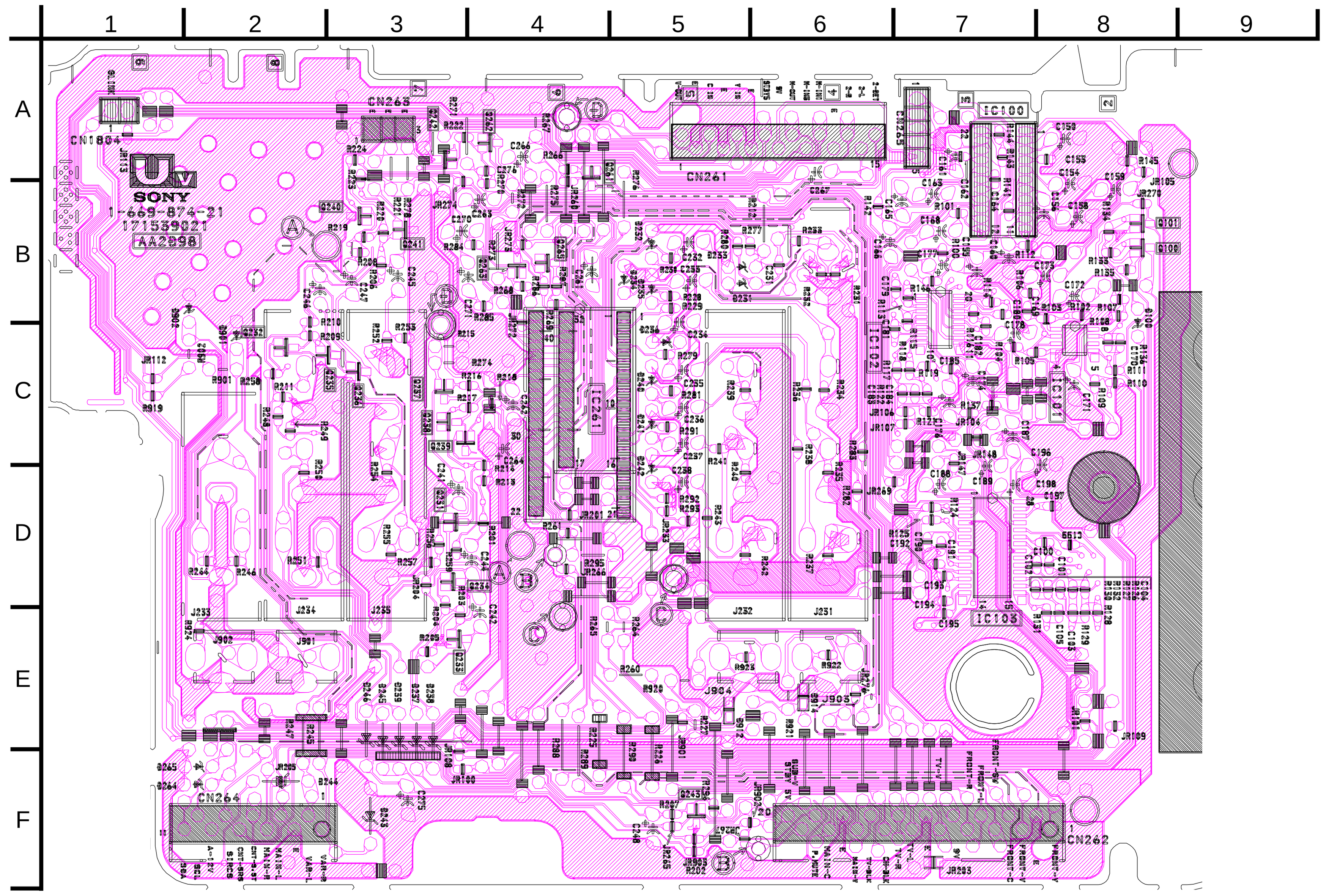

UV BOARD MARK (*) LIST

REF. NO.	LOC.	32S66/35S66	32V42/35V42	REF. NO.	LOC.	32S66/35S66	32V42/35V42
C100	D4	#	1μF	Q231	H3	#	2SD601A-Q
C101	E14	#	0.1μF	Q233	G3	#	2SD601A-Q
C102	E14	#	1μF	Q234	G3	#	2SD601A-Q
C103	E14	#	0.0047μF	Q238	G4	#	2SA1162-G
C104	E15	#	0.47μF	Q239	G4	#	2SA1162-G
C105	E14	#	0.47μF	Q261	A8	2SD601A-Q	#
C174	C16	#	10μF	R103	F13	22K	33K
C178	D17	#	10μF	R113	C16	#	22K
C179	C16	#	0.0033μF	R114	C17	#	22K
C180	C17	#	0.0033μF	R115	C16	#	22K
C181	C16	#	0.033μF	R116	C17	#	22K
C182	C17	#	0.033μF	R117	D16	#	10K
C183	D15	#	10PF	R118	D16	#	10K
C184	D15	#	10PF	R119	D16	#	10K
C185	D15	#	10PF	R124	D13	#	220
C187	D14	#	10μF	R125	D13	#	220
C188	D13	#	0.1μF	R126	E15	#	3.9K
C189	D13	#	0.1μF	R127	E14	#	47K
C190	E13	#	0.027μF	R128	E15	#	33K
C191	E13	#	0.0047μF	R129	E14	#	1.5K
C192	E13	#	470PF	R130	E14	#	130K
C193	E13	#	0.1μF	R131	E14	#	1K
C194	E13	#	0.015μF	R132	E15	#	43K
C195	E13	#	0.0022μF	R136	F14	22K	33K
C196	D14	#	22μF	R201	G4	#	4.7K
C197	D14	#	0.1μF	R202	G4	#	1K
C198	D14	#	1μF	R203	G3	#	6.8K
C199	D14	#	0.1μF	R204	G3	#	6.8K
C241	G3	#	470μF	R213	F4	#	4.7K
C242	G3	#	0.47μF	R214	F4	#	4.7K
C244	G3	#	0.47μF	R217	G5	#	100
C261	B8	0.047μF	#	R218	G5	#	100
C266	E8	1μF	#	R248	F2	#	68
C267	E8	1μF	#	R249	G3	#	470K
C275	G4	#	47μF	R250	G3	#	470K
D237	H3	#	MTZJ-3.3	R251	G3	#	470K
D238	G4	#	MTZJ-3.3	R256	H3	#	6.8K
D902	L2	RD10ESB2	#	R259	G3	#	4.7K
IC102	C16	#	NJM2150M-TE2	R261	E8	22	#
IC103	D13	#	TDA7467D013TR	R266	A8	0	#
IC261	C7	MM1313AD/	MM1311AD	R267	B8	680	#
J234	G2	#	3P	R275	E7	4.7K	#
J902	L2	3P	#	R276	E8	4.7K	#
J903	J2	3P	#	R288	C6	#	220
J904	K2	3P	#	R289	C6	#	220
JR106	D15	#	0	R290	C6	#	220
JR107	D15	#	0	R292	D6	#	100
JR147	D14	0	#	R293	E6	100	#
JR148	C15	0	#	R919	L3	0	#
JR901	K3	0	#	R922	J2	1K	#
JR902	I3	#	0	R923	K2	1K	#
JR903	I3	#	0				

#: NOT MOUNTED

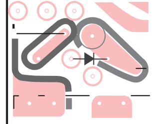

NOTE:
Portions of the circuit marked as shown are high voltage areas. Use care to prevent electric shocks during inspection or repair.

UV BOARD WAVEFORMS

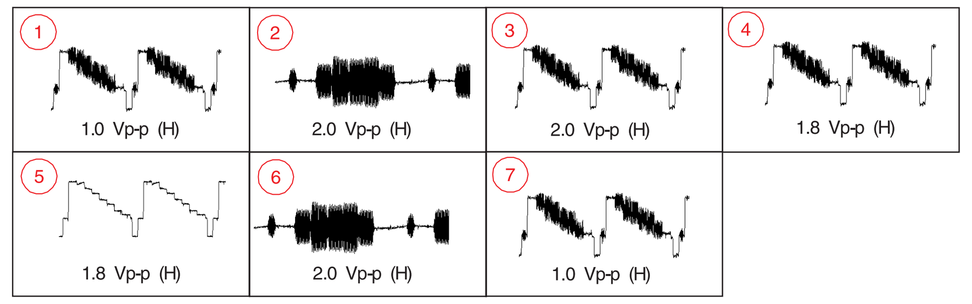

UV BOARD LOCATOR LIST

DIODES		D237	E3	D246	E3	IC102	C7	Q233	E3	Q262	A4
D231	B5	D238	E3	D264	F1	IC103	D7	Q234	D3	Q263	B3
D232	B5	D240	C5	D265	F1	IC261	C4	Q238	C3	Q265	B4
D233	B5	D241	C5	D902	B1	TRANSISTOR		Q239	C3		
D234	B5	D242	D5	IC		Q100	B8	Q237	C3		
D235	B5	D243	F3	IC100	A7	Q101	B8	Q243	F5		
D236	C5	D244	F2	IC101	C8	Q231	D3	Q261	A4		

UV BOARD: IC261 MM1311AD (KV-32V42/35V42 ONLY)

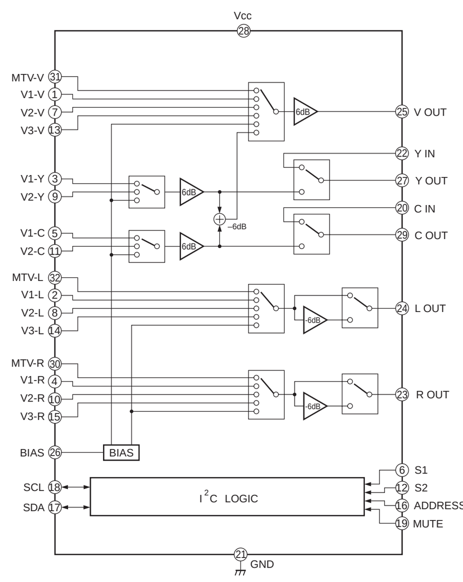

UV BOARD: IC261 MM1313AD/ (KV-32S66/35S66 ONLY)

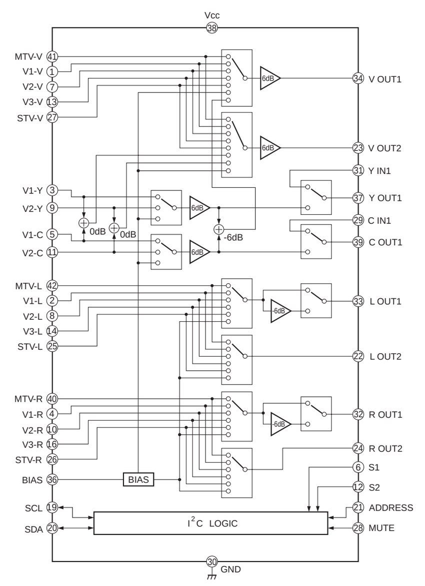

6-5. SEMICONDUCTORS

DTC114EK
2SC1623-L5L6
2SA1330-06
2SA1162-G
2SD601A-Q

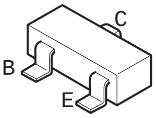

2SC3209LK

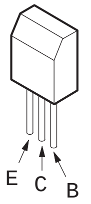

2SA1837
2SC4159-E

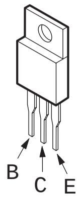

2SA1175-HFE
2SC2785-HFE

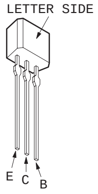

2SD2144S-V

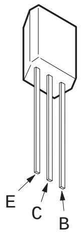

IRF614

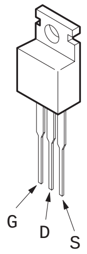

MX0841

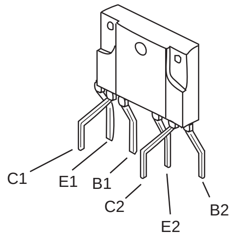

2SK2845-LB102

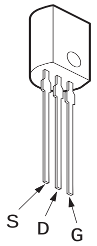

2SC5148

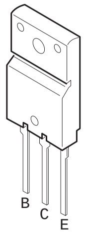

ERC06-15S
ISSI33T-77

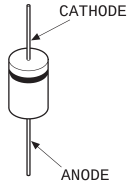

D1NS4
D1N20R
MTZJ-3.3
MTZJ-33A
RD10ESB2
RD39ES-B2
RD5.6ESB2
RD6.2ESB2

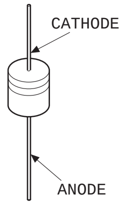

D2L2OU
EL1Z
EZD150AV1
GP08D
MTZJ-T-77-4.3C
EGP20G

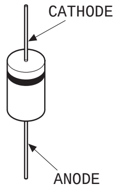

2SC4834M

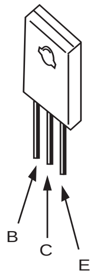

EGP30D
ERD29-08J

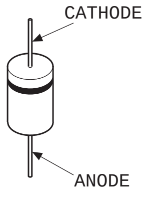

D10SBS4F

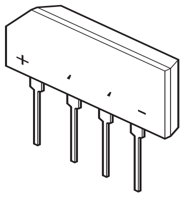

D4SB60L
D1NL40-TA2

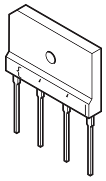

D10SC4M

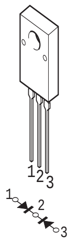

U05G

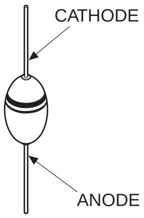

D1NL20U

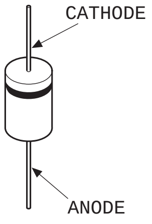

SECTION 7
EXPLODED VIEW

- Items with no part number and no description are not stocked because they are seldom required for routine service.
- The component parts of an assembly are indicated by the reference numbers in the remarks column.
- Items marked * are not stocked since they are seldom required for routine service. Some delay should be anticipated when ordering these items.

Note:

The components identified by shading and mark ⚠ are critical for safety. Replace only with part number specified.

Note:

Les composants identifies per un trame et une marque ⚠ sont critiques pour la securite. Ne les remplacer que par une piece portant le numero specifie.

7-1. CHASSIS (KV-32S42 ONLY)

■ 7-685-648-79 SCREW +BVTP 3X12
● 4-388-477-01 SCREW +BVTP 3X16
▲ 4-041-268-01 SCREW (7), TAPPING

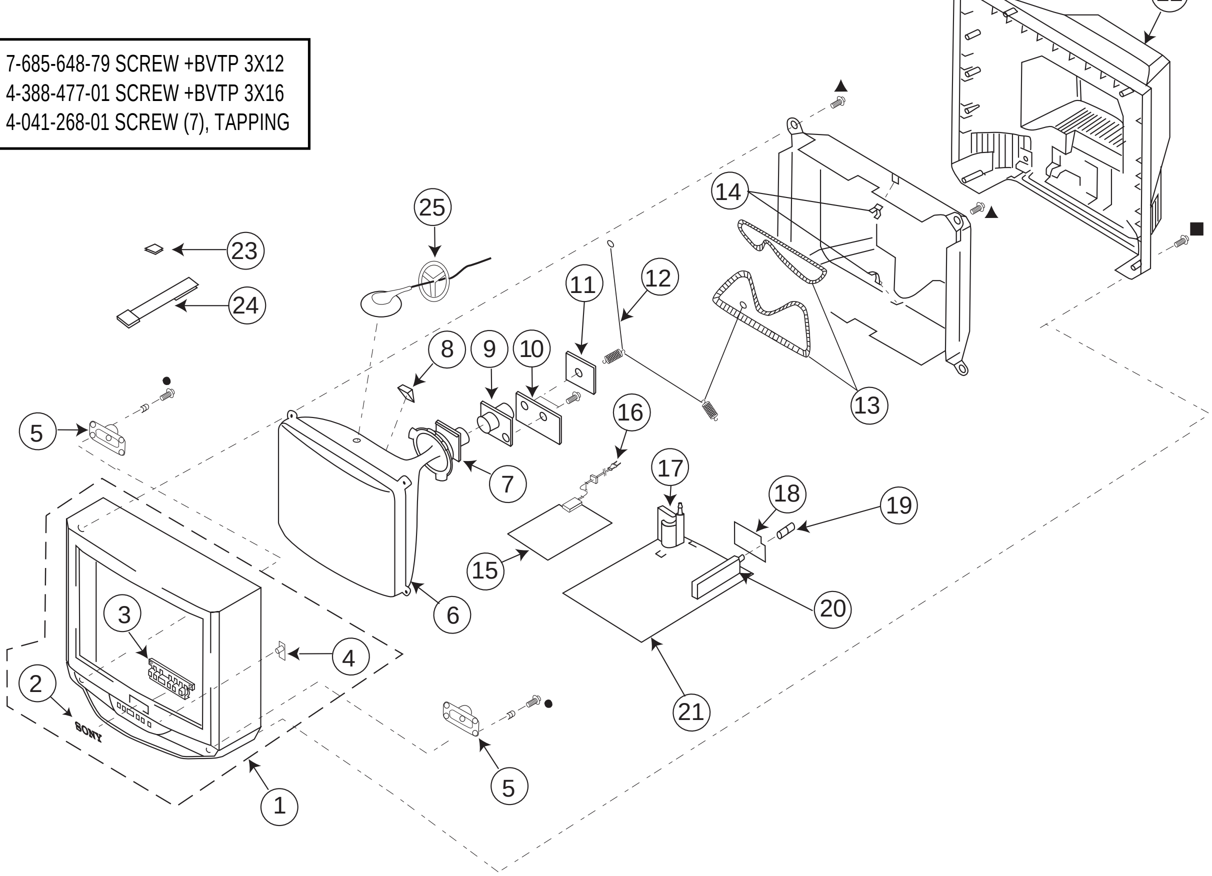

REF. NO.		PART NO.	DESCRIPTION	REMARK
1		X-4035-771-1	BEZNET ASSY	2-4
2		4-046-160-11	EMBLEM (NO.9), SONY	
3		4-063-573-01	BUTTON, MULTI	
4		4-063-570-01	GUIDE, LED	
5		1-504-531-11	SPEAKER (13.1X6.2CM)	
6	⚠	8-733-757-05	CRT 34FX2T (FOR N.A.AREA)	
7	⚠	8-451-482-11	DY Y34FXA2-V	
8		4-053-005-01	SPACER, DY	
9	⚠	1-452-579-21	NECK ASSY, CRT (NA322)	
10	*	A-1372-508-A	WB MOUNTED PC BOARD	
11	*	A-1331-837-A	C (VAR) MOUNTED PC	
12		4-036-329-01	SPRING (B), TENSION	
13	⚠	1-402-952-11	COIL, DEMAGNETIZATION	
14	*	4-371-629-01	STOPPER, WIRE	
15	*	A-1316-389-A	G COMPLETE PC BOARD	
16	⚠	1-790-315-21	CORD, AC POWER(WITH CONNECTOR)	
17	⚠	1-453-207-11	FBT ASSY NX-2609//X4C	
18	*	A-1135-950-A	B COMPLETE PC BOARD	
19		1-766-374-11	PLUG, F-PIN	
20	⚠	8-598-431-00	TUNER, FSS BTF-WA411	
21	*	A-1299-001-A	A COMPLETE PC BOARD	
22		4-063-852-01	COVER, REAR	
23		1-452-885-11	MAGNET, LANDING	
24		4-062-047-01	PIECE A(110), CONV CORRECT	
25		3-704-372-31	HOLDER, HV CABLE	

Note:

The components identified by shading and mark ⚠ are critical for safety. Replace only with part number specified.

Note:

Les composants identifies per un trame et une marque ⚠ sont critiques pour la securite. Ne les remplacer que par une piece portant le numero specifie.

7-2. CHASSIS (KV-32S66 ONLY)

- ■ 7-685-648-79 SCREW +BVTP 3X12
- ● 4-388-477-01 SCREW +BVTP 3X16
- ▲ 4-041-268-01 SCREW (7), TAPPING

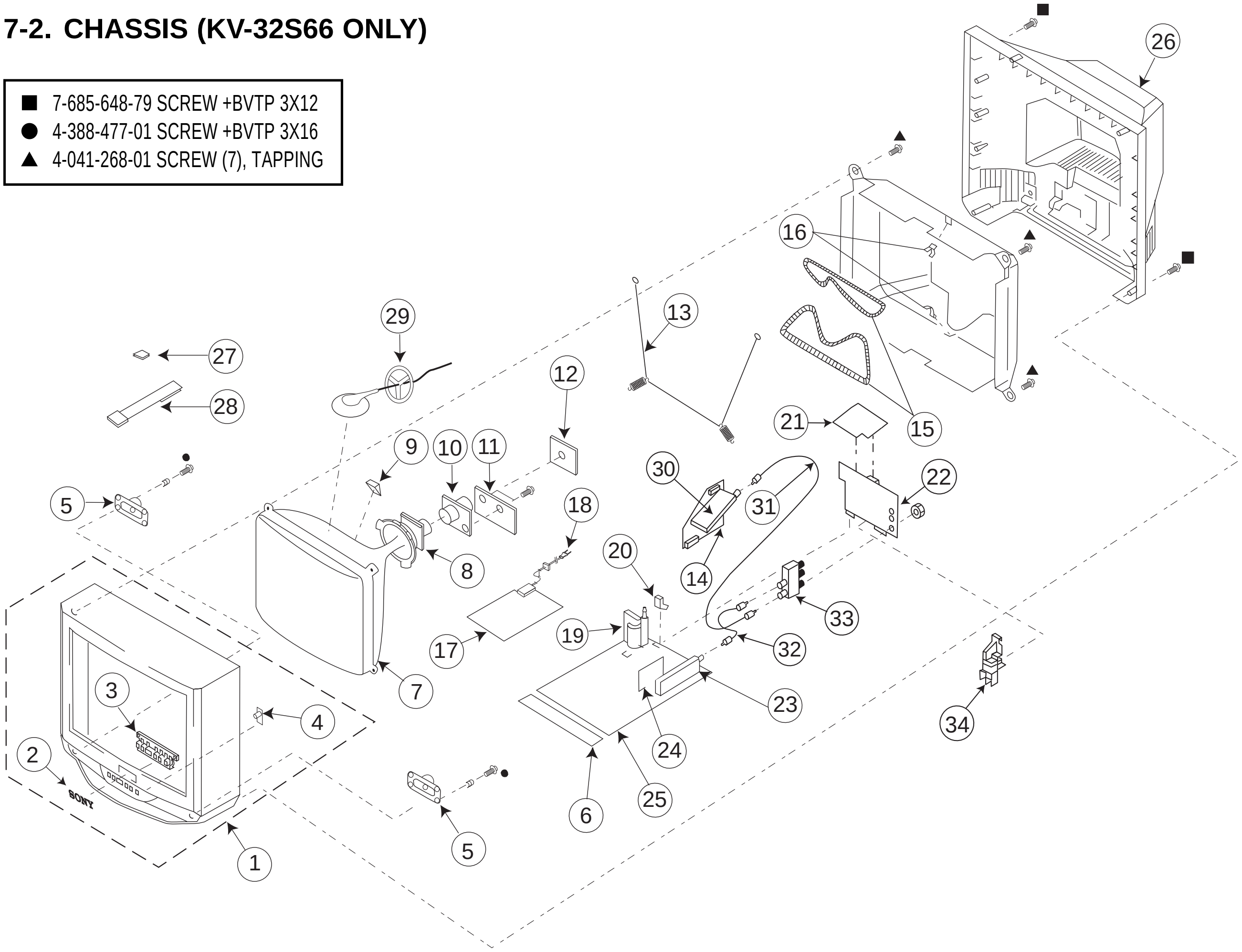

REF. NO.		PART NO.	DESCRIPTION	REMARK
1		X-4035-773-1	BEZNET ASSY	2-4
2		4-046-160-11	EMBLEM (NO.9), SONY	
3		4-063-573-01	BUTTON, MULTI	
4		4-063-570-01	GUIDE, LED	
5		1-504-531-11	SPEAKER (13.1X6.2CM)	
6	*	A-1372-519-A	HS (VAR) MOUNTED PC	
7	⚠	8-733-757-05	CRT 34FX2T (FOR N.A.AREA)	
8	⚠	8-451-482-11	DY Y34FXA2-V	
9		4-053-005-01	SPACER, DY	
10	⚠	1-452-579-21	NECK ASSY, CRT (NA322)	
11	*	A-1372-508-A	WB MOUNTED PC BOARD	
12	*	A-1331-837-A	C (VAR) MOUNTED PC	
13		4-036-329-01	SPRING (B), TENSION	
14	*	A-1298-612-A	AV COMPLETE PC BOARD	
15	⚠	1-402-952-11	COIL, DEMAGNETIZATION	
16		4-371-629-01	STOPPER, WIRE	
17	*	A-1316-389-A	G COMPLETE PC BOARD	
18	⚠	1-790-315-21	CORD, AC POWER(WITH CONNECTOR)	
19	⚠	1-453-207-11	FBT ASSY NX-2609//X4C	
20		4-064-530-01	CLIP, CHASSIS	

REF. NO.		PART NO.	DESCRIPTION	REMARK
21	*	A-1135-949-A	B COMPLETE PC BOARD	
22	*	A-1394-910-A	UV COMPLETE PC BOARD	
23	⚠	8-598-431-00	TUNER, FSS BTF-WA411	
24	*	A-1195-154-A	P COMPLETE PC BOARD	
25	*	A-1298-997-A	A COMPLETE PC BOARD	
26		4-064-760-11	COVER, REAR	
27		1-452-885-11	MAGNET, LANDING	
28		4-062-047-01	PIECE A(110), CONV CORRECT	
29		3-704-372-31	HOLDER, HV CABLE	
30	⚠	8-598-430-00	TUNER, FSS BTF-FA401	
31	*	1-556-945-21	CABLE, P-P	
32	*	1-557-056-31	CABLE, P-P	
33		8-598-414-10	CHANGER, ANTENNA AS-2F	
34	*	4-052-905-01	V5/6 BRACKET	

Note:

The components identified by shading and mark ⚠ are critical for safety. Replace only with part number specified.

Note:

Les composants identifies per un trame et une marque ⚠ sont critiques pour la securite. Ne les remplacer que par une piece portant le numero specifie.

7-3. CHASSIS (KV-32V42 ONLY)

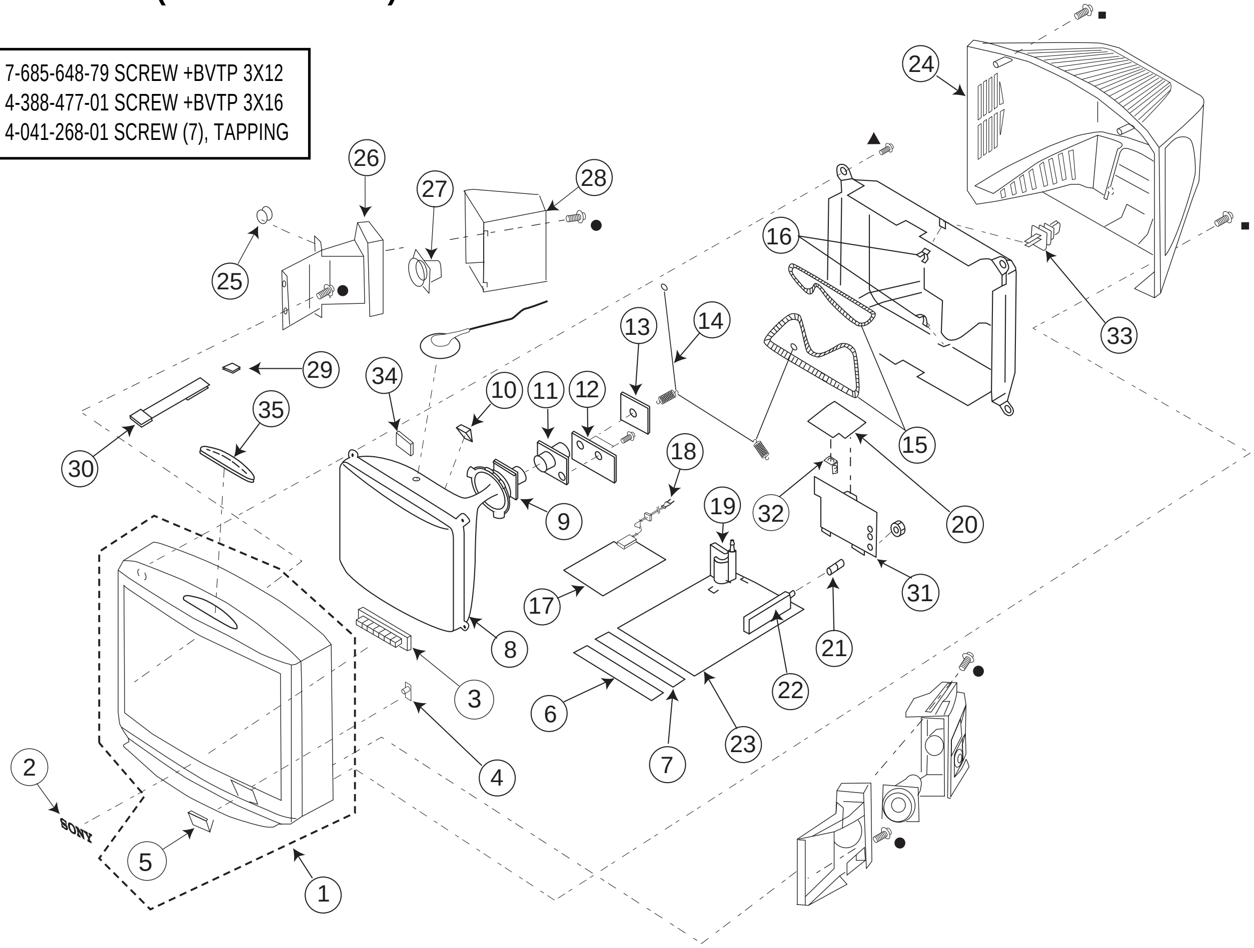

REF. NO.		PART NO.	DESCRIPTION	REMARK
1		X-4036-561-1	BEZNET ASSY	5
2		4-046-160-01	EMBLEM (NO.9), SONY	
3		4-052-907-11	BUTTON, MULTI	
4	*	4-052-897-01	GUIDE, LED	
5		4-052-906-11	DOOR, CONTROL	
6	*	A-1372-510-A	HS (VAR) MOUNTED PC	
7	*	A-1372-684-A	HV (VAR) MOUNTED PC	
8	⚠	8-733-757-05	CRT 34FX2T (FOR N.A.AREA)	
9	⚠	8-451-482-11	DY Y34FXA2-V	
10		4-053-005-01	SPACER, DY	
11	⚠	1-452-579-21	NECK ASSY, CRT (NA322)	
12	*	A-1372-508-A	WB MOUNTED PC BOARD	
13	*	A-1331-837-A	C (VAR) MOUNTED PC	
14		4-036-329-01	SPRING (B), TENSION	
15	⚠	1-402-952-11	COIL, DEMAGNETIZATION	
16	*	4-371-629-01	STOPPER, WIRE	
17	*	A-1316-389-A	G COMPLETE PC BOARD	
18	⚠	1-790-315-11	CORD, AC POWER(WITH CONNECTOR)	
19	⚠	1-453-207-11	FBT ASSY NX-2609//X4C	
20	*	A-1135-948-A	B COMPLETE PC BOARD	
21		1-766-374-11	PLUG, F-PIN	
22	⚠	8-598-431-00	TUNER, FSS BTF-WA411	
23	*	A-1298-999-A	A COMPLETE PC BOARD	
24		4-053-766-31	COVER, REAR	
25		4-374-745-31	CUSHION (A)	
26		X-4035-400-1	BAFFLE ASSY, SPEAKER	25
27		1-504-524-31	SPEAKER (8CM)	
28		X-4035-401-1	COVER ASSY, SPEAKER	
29		1-452-885-11	MAGNET, LANDING	
30		4-062-047-01	PIECE A(110), CONV CORRECT	
31	*	A-1394-905-A	UV COMPLETE PC BOARD	
32	*	3-696-606-02	HINGE, VI	
33		4-033-681-01	HOLDER, LEAD	
34	*	4-064-378-01	CUSHION (20 MM), CRT	
35		1-473-549-21	SWITCH, BLOCK CONTROL	

Note:

The components identified by shading and mark ⚠ are critical for safety. Replace only with part number specified.

Note:

Les composants identifies per un trame et une marque ⚠ sont critiques pour la securite. Ne les remplacer que par une piece portant le numero specifie.

7-4. CHASSIS (KV-35S42 ONLY)

- ■ 7-685-648-79 SCREW +BVTP 3X12
- ● 4-388-477-01 SCREW +BVTP 3X16
- ▲ 4-041-268-01 SCREW (7), TAPPING

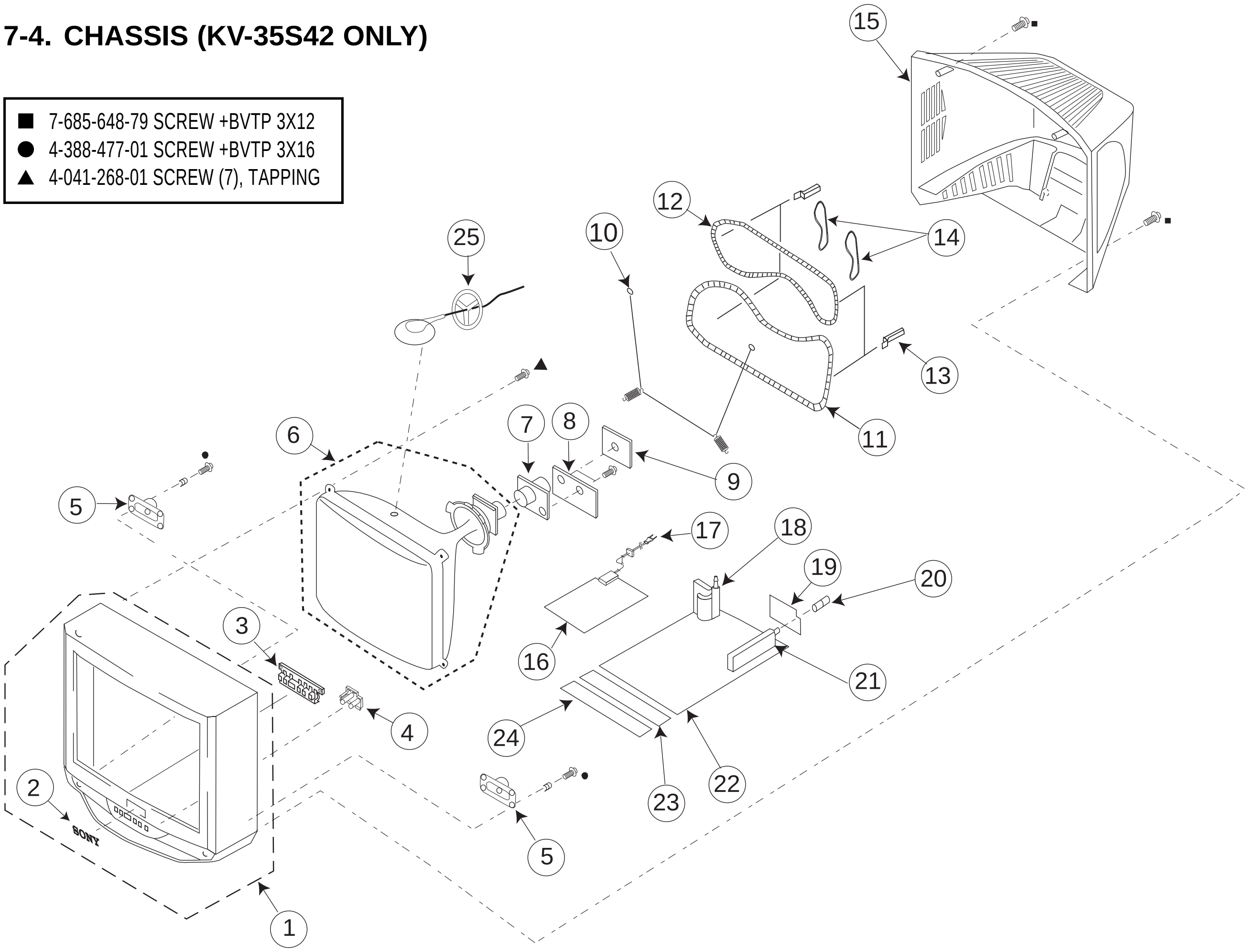

REF. NO.		PART NO.	DESCRIPTION	REMARK
1		X-4035-596-1	BEZNET ASSY	2
2		4-046-160-01	EMBLEM (NO.9), SONY	
3		4-058-053-11	BUTTON, MULTI	
4		4-058-054-01	BAR, OPTICAL	
5		1-504-531-11	SPEAKER (13.1X6.2CM)	
6	⚠	8-733-761-61	ITC 37GXT-A1/A1597168A	
7	⚠	8-453-007-51	NA324-M5	
8	*	A-1372-462-A	WA MOUNTED PWB	
9	*	A-1331-843-A	C (VAR) MOUNTED PC	
10		4-036-329-01	SPRING (B), TENSION	
11	⚠	1-411-881-21	COIL, DEGAUSSING	
12	⚠	1-411-882-21	COIL, DEGAUSSING	
13	*	4-052-900-02	HOLDER, DGC	
14		4-059-585-01	TIE, CABLE	
15		4-058-052-22	COVER, REAR	
16	*	A-1316-399-A	G COMPLETE PC BOARD	
17	⚠	1-790-315-11	CORD, AC POWER(WITH CONNECTOR)	
17	⚠	1-751-059-11	CORD, POWER (WITH CONNECTOR) (35S42CND ONLY)	
18	⚠	X-4560-159-1	FBT ASSY NX-3005//JIC4	
19	*	A-1135-950-A	B COMPLETE PC BOARD	
20		1-766-374-11	PLUG, F-PIN	
21	⚠	8-598-431-00	TUNER FSS BTF-WA411	
22	*	A-1298-899-A	A COMPLETE PC BOARD	
23	*	A-1372-523-A	HV (VAR) MOUNTED PC	
24	*	A-1372-507-A	HS (COM) MOUNTED PC	
25		3-704-372-31	HOLDER, HV CABLE	

Note:

The components identified by shading and mark ⚠ are critical for safety. Replace only with part number specified.

Note:

Les composants identifies per un trame et une marque ⚠ sont critiques pour la securite. Ne les remplacer que par une piece portant le numero specifie.

7-5. CHASSIS (KV-35S66 ONLY)

■ 7-685-648-79 SCREW +BVTP 3X12
● 4-388-477-01 SCREW +BVTP 3X16
▲ 4-046-765-01 SCREW (7), TAPPING

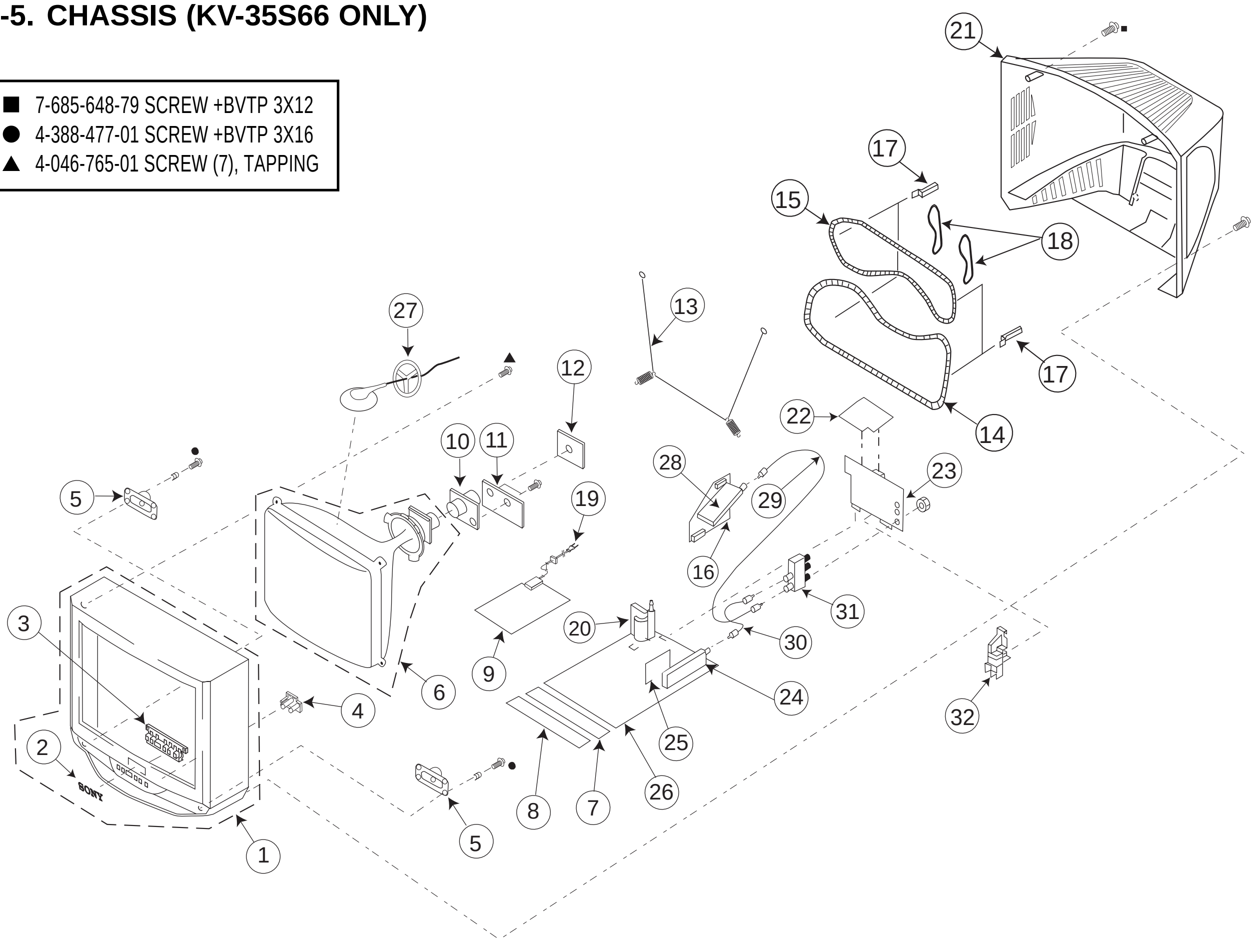

REF. NO.		PART NO.	DESCRIPTION	REMARK
1		X-4035-598-1	BEZNET ASSY	2
2		4-046-160-01	EMBLEM (NO.9), SONY	
3		4-058-053-11	BUTTON, MULTI	
4		4-058-054-01	BAR, OPTICAL	
5		1-504-531-11	SPEAKER (13.1X6.2CM)	
6	⚠	8-733-761-61	ITC 37GXT-A1/A1597168A	
7	*	A-1372-507-A	HS COMPLETE PC BOARD	
8	*	A-1372-523-A	HV (VAR) MOUNTED PC	
9	*	A-1316-399-A	G COMPLETE PC BOARD	
10	⚠	8-453-007-51	NA324-M5	
11	*	A-1372-462-A	WA MOUNTED PWB	
12	*	A-1331-843-A	C (VAR) MOUNTED PC	
13		4-036-329-01	SPRING (B), TENSION	
14	⚠	1-411-881-21	COIL, DEGAUSSING	
15	⚠	1-411-882-21	COIL, DEGAUSSING	
16	*	A-1298-612-A	AV COMPLETE PC BOARD	
17	*	4-052-900-02	HOLDER, DGC	
18		4-059-585-01	TIE, CABLE	
19	⚠	1-751-059-11	CORD, POWER (WITH CONNECTOR) (KV-35S66CND ONLY)	

REF. NO.		PART NO.	DESCRIPTION	REMARK
19	⚠	1-790-315-11	CORD, AC POWER (WITH CONNECTOR)	
20	⚠	X-4560-159-1	FBT ASSY NX-3005//JIC4	
21		4-058-052-32	COVER, REAR	
22	*	A-1135-949-A	B COMPLETE PC BOARD	
23	*	A-1394-910-A	UV COMPLETE PC BOARD	
24	⚠	8-598-431-00	TUNER, FSS BTF-WA411	
25	*	A-1195-154-A	P COMPLETE PC BOARD	
26	*	A-1298-897-A	A COMPLETE PC BOARD	
27		3-704-372-31	HOLDER, HV CABLE	
28	⚠	8-598-430-00	TUNER, FSS BTF-FA401	
29	*	1-556-945-21	CABLE, P-P	
30	*	1-557-056-31	CABLE, P-P	
31		8-598-414-10	CHANGER, ANTENNA AS-2F	
32	*	4-052-905-01	V5/6 BRACKET	

Note:

The components identified by shading and mark ⚠ are critical for safety. Replace only with part number specified.

Note:

Les composants identifies per un trame et une marque ⚠ sont critiques pour la securite. Ne les remplacer que par une piece portant le numero specifie.

7-6. CHASSIS (KV-35V42 ONLY)

■ 7-685-648-79 SCREW +BVTP 3X12
● 4-388-477-01 SCREW +BVTP 3X16
▲ 4-041-268-01 SCREW (7), TAPPING
△ 7-685-663-79 SCREW +BVTP 3X12

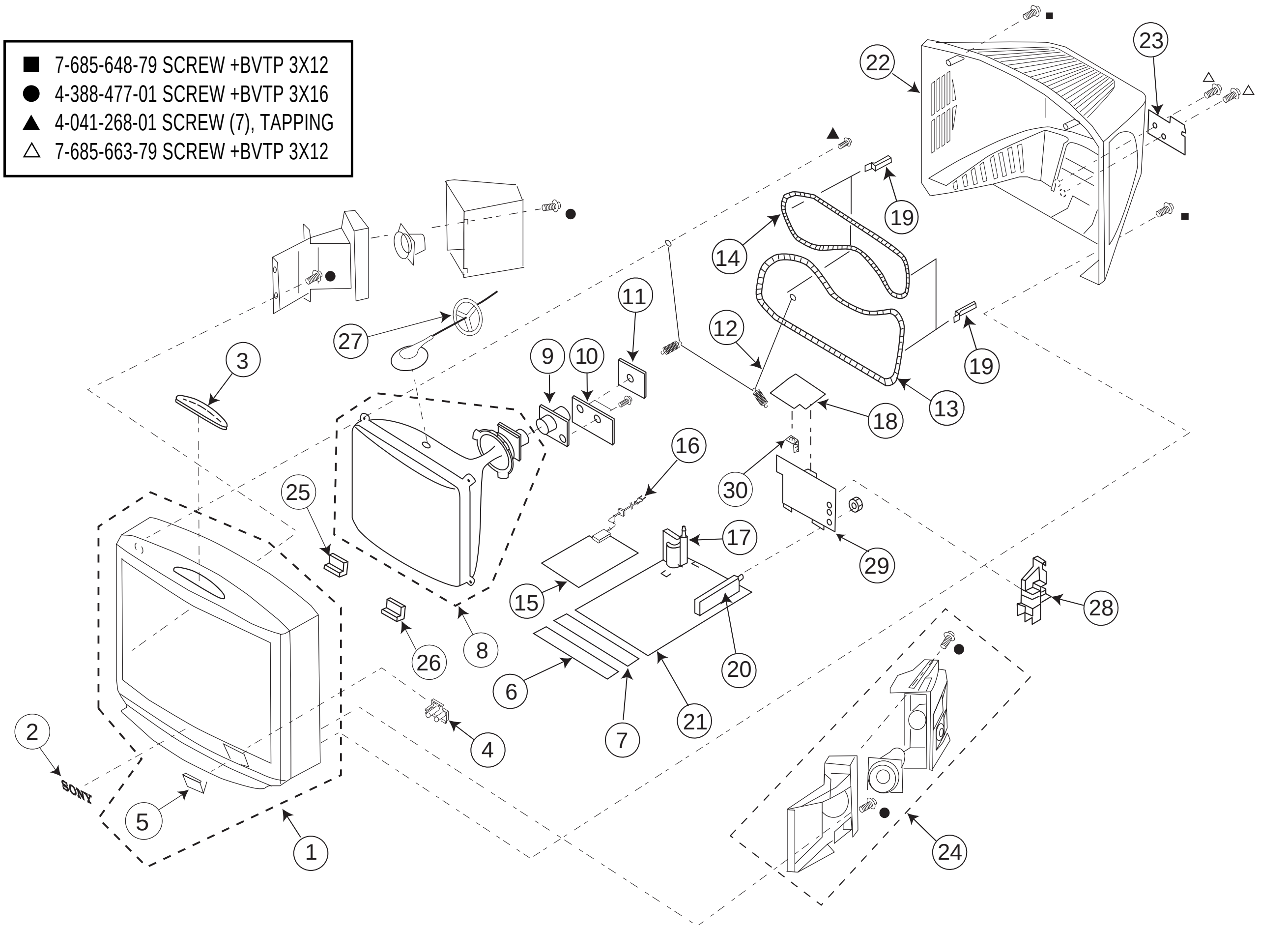

REF. NO.		PART NO.	DESCRIPTION	REMARK
1		X-4036-563-1	BEZNET ASSY	5
2		4-046-160-01	EMBLEM (NO.9), SONY	
3		1-473-549-21	SWITCH BLOCK, CONTROL	
4	*	4-052-897-01	GUIDE, LED	
5		4-052-906-11	DOOR, CONTROL	
6	*	A-1372-510-A	HS (VAR) MOUNTED PC BOARD	
7	*	A-1372-684-A	HV (VAR) MOUNTED PC BOARD	
8	⚠	8-733-761-61	ITC 37GXT-A1/A1597168A	
9	⚠	8-453-007-51	NA324-M5	
10	*	A-1372-462-A	WA MOUNTED PWB	
11	*	A-1331-843-A	C (VAR) MOUNTED PC BOARD	
12		4-036-329-01	SPRING (B), TENSION	
13	⚠	1-411-881-21	COIL, DEGAUSSING	
14	⚠	1-411-882-21	COIL, DEGAUSSING	
15		A-1316-399-A	G COMPLETE PC BOARD	
16	⚠	1-790-315-11	CORD, AC POWER(WITH CONNECTOR)	
17	⚠	X-4560-159-1	FBT ASSY NX-3005//JIC4	
18	*	A-1135-948-A	B COMPLETE PC BOARD	
19	*	4-052-900-02	HOLDER, DGC	
20	⚠	8-598-431-00	TUNER, FSS BTF-WA411	

REF. NO.		PART NO.	DESCRIPTION	REMARK
21	*	A-1298-898-A	A COMPLETE PC BOARD	
22		4-052-903-12	COVER, REAR	
23		4-070-877-11	LABEL, TUNER TERMINAL	
24		1-505-684-11	SPEAKER UNIT, BOX TYPE (2WAY)	
25		4-052-902-01	CRT SUPPORT (L)	
26		4-052-901-01	CRT SUPPORT (R)	
27		3-704-372-31	HOLDER, HV CABLE	
28	*	4-052-905-01	V5/6 BRACKET	
29		A-1394-905-A	UV COMPLETE PC BOARD	
30	*	3-696-606-02	HINGE, VI	

SECTION 8
ELECTRICAL PARTS LIST

PARTS LISTING TABLE OF CONTENTS

Page

A BOARD COMMON PARTS LIST: Parts common to all models listed in this manual 71

A BOARD VARIANT PARTS LIST: Parts that belong only to the model specified 79

Refer to the designated variant parts list when seeking a part indicated by an asterisk (*) on the A Board schematic or by the word “variant” on the common parts list.

Model	Page
KV-32S42	79
KV-32S66	81
KV-32V42	82
KV-35S42	83
KV-35S66	85
KV-35V42	86

AV BOARD COMPLETE PARTS LIST (KV-32S66/35S66 only) 87

B BOARD COMPLETE PARTS LIST (All Models) 87

C BOARD COMPLETE PARTS LIST (All Models) 89

G BOARD COMPLETE PARTS LIST (All Models) 89

HS BOARD COMPLETE PARTS LIST (KV-32S66/32V42/35S42/35S66/35V42 only) 91

HV BOARD COMPLETE PARTS LIST (KV-32V42/35S42/35S66/35V42 only) 92

P BOARD COMPLETE PARTS LIST (KV-32S66/35S66 only) 92

UV BOARD COMPLETE PARTS LIST (KV-32S66/32V42/35S66/35V42 only) 93

WA BOARD COMPLETE PARTS LIST (KV-35S42/35S66/35V42 only) 96

WB BOARD COMPLETE PARTS LIST (KV-32S42/32S66/32V42 only) 97

ACCESSORIES AND PACKAGING (All Models) 98

Common Parts Listing A

Note:

The components identified by shading and mark ⚠ are critical for safety. Replace only with part number specified.

Note:

Les composants identifies per un trame et une marque ⚠ sont critiques pour la securite. Ne les remplacer que par une piece portant le numero specifie.

- The components identified by ⧗ in this manual have been carefully factory-selected for each set in order to satisfy regulations regarding X-ray radiation. Should replacement be required, replace only with the value originally used.
- Items marked * are not stocked since they are seldom required for routine service. Some delay should be anticipated when ordering these items.
- All variable and adjustable resistors have characteristic curve B, unless otherwise noted.

RESISTORS
- All resistors are in ohms
- F : nonflammable

When indicating parts by reference number, please include the board name.

REF. NO.	PART NO.	DESCRIPTION				REMARK
A						
*	**A-1299-001-A**	**A COMPLETE PC BOARD (KV-32S42)**				
*	**A-1298-997-A**	**A COMPLETE PC BOARD (KV-32S66)**				
*	**A-1298-999-A**	**A COMPLETE PC BOARD (KV-32V42)**				
*	**A-1298-899-A**	**A COMPLETE PC BOARD (KV-35S42)**				
*	**A-1298-897-A**	**A COMPLETE PC BOARD (KV-35S66)**				
*	**A-1298-898-A**	**A COMPLETE PC BOARD (KV-35V42)**				
	4-382-854-11	SCREW (M3X10), P, SW (+)				
	4-382-854-11	SCREW (M3X10), P, SW (+)				
	CAPACITOR					
C001	1-163-259-91	CERAMIC	220pF	5%	50V	
C003	1-104-760-11	CERAMIC	0.047µF	10%	50V	
C005	1-126-960-11	ELECT	1µF	20%	50V	
C009	1-126-967-11	ELECT	47µF	20%	50V	
C010	1-163-033-91	CERAMIC	0.022µF		50V	
C012	1-216-033-00	RES,CHIP	220	5%	1/10W	
C013	1-216-121-91	RES,CHIP	1M	5%	1/10W	
C014	1-164-161-11	CERAMIC	0.0022µF	10%	50V	
C023	1-163-259-91	CERAMIC	220pF	5%	50V	
C028	1-163-227-11	CERAMIC	10pF	0.50%	50V	
C029	1-163-227-11	CERAMIC	10pF	0.50%	50V	
C030	1-163-009-11	CERAMIC	0.001µF	10%	50V	
C035	1-163-237-11	CERAMIC	27pF	5%	50V	
C036	1-163-231-11	CERAMIC	15pF	5%	50V	
C037	1-163-243-11	CERAMIC	47pF	5%	50V	
C038	1-163-243-11	CERAMIC	47pF	5%	50V	
C039	1-163-243-11	CERAMIC	47pF	5%	50V	
C040	1-163-243-11	CERAMIC	47pF	5%	50V	
C051	1-164-004-11	CERAMIC	0.1µF	10%	25V	
C053	1-163-021-91	CERAMIC	0.01µF	10%	50V	
C056	1-163-243-11	CERAMIC	47pF	5%	50V	
C061	1-163-033-91	CERAMIC	0.022µF		50V	
C062	1-163-033-91	CERAMIC	0.022µF		50V	
C063	1-126-935-11	ELECT	470µF	20%	16V	
C068		VARIANT (SEE VARIANT PARTS LIST)				
C069		VARIANT (SEE VARIANT PARTS LIST)				
C070	1-126-967-11	ELECT	47µF	20%	50V	
C071	1-164-096-11	CERAMIC	0.01µF		50V	
C072	1-164-161-11	CERAMIC	0.0022µF	10%	50V	
C075	1-107-823-11	CERAMIC	0.47µF	10%	16V	
C076		VARIANT (SEE VARIANT PARTS LIST)				
C077		VARIANT (SEE VARIANT PARTS LIST)				
C090		VARIANT (SEE VARIANT PARTS LIST)				
C353	1-163-231-11	CERAMIC	15pF	5%	50V	
C354	1-163-133-00	CERAMIC	470pF	5%	50V	
C355	1-126-959-11	ELECT	0.47µF	20%	50V	
C356	1-126-963-11	ELECT	4.7µF	20%	50V	
C357	1-126-959-11	ELECT	0.47µF	20%	50V	
C358	1-163-021-91	CERAMIC	0.01µF	10%	50V	
C359	1-126-933-11	ELECT	100µF	20%	16V	
C360		VARIANT (SEE VARIANT PARTS LIST)				
C361		VARIANT (SEE VARIANT PARTS LIST)				
C362		VARIANT (SEE VARIANT PARTS LIST)				
C363	1-163-021-91	CERAMIC	0.01µF	10%	50V	
C364	1-163-021-91	CERAMIC	0.01µF	10%	50V	
C365	1-163-021-91	CERAMIC	0.01µF	10%	50V	
C366	1-130-495-00	FILM	0.1µF	5%	50V	
C367	1-130-495-00	FILM	0.1µF	5%	50V	
C368	1-130-495-00	FILM	0.1µF	5%	50V	
C369	1-163-243-11	CERAMIC	47pF	5%	50V	
C370		VARIANT (SEE VARIANT PARTS LIST)				
C371	1-163-141-00	CERAMIC	0.001µF	5%	50V	
C372	1-126-959-11	ELECT	0.47µF	20%	50V	
C373	1-126-960-11	ELECT	1µF	20%	50V	
C375		VARIANT (SEE VARIANT PARTS LIST)				
C376	1-126-964-11	ELECT	10µF	20%	50V	
C377	1-130-495-00	FILM	0.1µF	5%	50V	
C378	1-130-495-00	FILM	0.1µF	5%	50V	
C379	1-163-021-91	CERAMIC	0.01µF	10%	50V	
C380	1-126-935-11	ELECT	470µF	20%	16V	
C381	1-163-003-11	CERAMIC	330pF	10%	50V	
C383	1-130-495-00	FILM	0.1µF	5%	50V	
C385	1-164-182-11	CERAMIC	0.0033µF	10%	50V	
C386	1-163-021-91	CERAMIC	0.01µF	10%	50V	
C387	1-126-961-11	ELECT	2.2µF	20%	50V	
C388	1-126-959-11	ELECT	0.47µF	20%	50V	

A Common Parts Listing

Note:

The components identified by shading and mark ⚠ are critical for safety. Replace only with part number specified.

Note:

Les composants identifies per un trame et une marque ⚠ sont critiques pour la securite. Ne les remplacer que par une piece portant le numero specifie.

REF.NO.	PART NO.	DESCRIPTION		REMARK	
C390	1-126-960-11	ELECT	1µF	20%	50V
C391	1-163-017-00	CERAMIC	0.0047µF	10%	50V
C392	1-163-251-11	CERAMIC	100pF	5%	50V
C461		VARIANT (SEE VARIANT PARTS LIST)			
C462	1-126-961-11	ELECT	2.2µF	20%	50V
C463	1-126-961-11	ELECT	2.2µF	20%	50V
C464	1-163-017-00	CERAMIC	0.0047µF	10%	50V
C466	1-104-666-11	ELECT	220µF	20%	25V
C467	1-163-017-00	CERAMIC	0.0047µF	10%	50V
C468	1-104-664-11	ELECT	47µF	20%	25V
C470	1-126-961-11	ELECT	2.2µF	20%	50V
C471	1-104-666-11	ELECT	220µF	20%	25V
C472	1-137-194-81	FILM	0.47µF	5%	50V
C473	1-136-169-00	FILM	0.22µF	5%	50V
C474	1-126-942-61	ELECT	1000µF	20%	25V
C475	1-136-169-00	FILM	0.22µF	5%	50V
C476	1-126-942-61	ELECT	1000µF	20%	25V
C477	1-126-942-61	ELECT	1000µF	20%	25V
C501	1-163-259-91	CERAMIC	220pF	5%	50V
C502	1-126-959-11	ELECT	0.47µF	20%	50V
C503	1-163-003-11	CERAMIC	330pF	10%	50V
C504	1-102-212-00	CERAMIC	820pF	10%	500V
C505	1-102-002-00	CERAMIC	680pF	10%	500V
C506	1-106-383-00	MYLAR	0.047µF	10%	200V
C507	⚠ 1-162-116-00	CERAMIC	680pF	10%	2KV
C508	1-102-244-00	CERAMIC	220pF	10%	500V
C509	1-162-116-00	CERAMIC	680pF	10%	2KV
C510	1-137-150-11	MYLAR	0.01µF	10%	100V
C511	⚠ 1-115-460-11	FILM	0.022µF	3%	1.2KV
C513		VARIANT (SEE VARIANT PARTS LIST)			
C514		VARIANT (SEE VARIANT PARTS LIST)			
C515	1-106-343-00	MYLAR	0.001µF	10%	100V
C516	1-115-461-11	FILM	2µF	5%	200V
C517	1-107-649-11	ELECT	2.2µF	20%	250V
C518	1-106-395-00	MYLAR	0.15µF	10%	200V
C519	1-162-815-11	CERAMIC	47pF	5%	500V
C520		VARIANT (SEE VARIANT PARTS LIST)			
C521		VARIANT (SEE VARIANT PARTS LIST)			
C522	1-126-960-11	ELECT	1µF	20%	50V
C525	1-102-244-00	CERAMIC	220pF	10%	500V
C526	1-107-662-11	ELECT	22µF	20%	250V
C527	1-162-116-00	CERAMIC	680pF	10%	2KV
C528	1-164-161-11	CERAMIC	0.0022µF	10%	50V
C529	1-128-551-11	ELECT	22µF	20%	25V
C530	1-137-366-11	FILM	0.0022µF	5%	50V
C531	1-126-965-11	ELECT	22µF	20%	50V
C532	1-126-965-11	ELECT	22µF	20%	50V
C534	1-126-967-11	ELECT	47µF	20%	50V
C537		VARIANT (SEE VARIANT PARTS LIST)			
C539		VARIANT (SEE VARIANT PARTS LIST)			
C540	1-123-024-21	ELECT	33µF		160V
C541	1-128-560-11	ELECT	22µF	20%	100V
C542		VARIANT (SEE VARIANT PARTS LIST)			
C545	1-106-387-00	MYLAR	0.068µF	10%	200V
C546	1-106-343-00	MYLAR	0.001µF	10%	100V
C547	1-106-343-00	MYLAR	0.001µF	10%	100V
C551	1-163-037-11	CERAMIC	0.022µF	10%	50V
C561	1-126-967-11	ELECT	47µF	20%	50V
C563	1-126-934-11	ELECT	220µF	20%	10V
C564	1-126-960-11	ELECT	1µF	20%	50V
C565	1-126-969-11	ELECT	220µF	20%	50V
C566	1-104-664-11	ELECT	47µF	20%	25V
C568	1-136-169-00	FILM	0.22µF	5%	50V
C571	1-104-664-11	ELECT	47µF	20%	25V
C1002	1-126-964-11	ELECT	10µF	20%	50V
C1101	1-126-768-11	ELECT	2200µF	20%	16V
C1103	1-126-965-11	ELECT	22µF	20%	50V
C1104	1-104-664-11	ELECT	47µF	20%	16V
C1105	1-104-664-11	ELECT	47µF	20%	16V
C1106	1-126-964-11	ELECT	10µF	20%	50V
C1107	1-163-003-11	CERAMIC	330pF	10%	50V
C1108	1-126-960-11	ELECT	1µF	20%	50V
C1109	1-126-964-11	ELECT	10µF	20%	50V
C1110	1-163-227-11	CERAMIC	10pF	0.50%	50V
C1111	1-163-227-11	CERAMIC	10pF	0.50%	50V
C1112	1-163-227-11	CERAMIC	10pF	0.50%	50V
C1236		VARIANT (SEE VARIANT PARTS LIST)			
C1237		VARIANT (SEE VARIANT PARTS LIST)			
C1238		VARIANT (SEE VARIANT PARTS LIST)			
C1239		VARIANT (SEE VARIANT PARTS LIST)			
C1240		VARIANT (SEE VARIANT PARTS LIST)			
C1241		VARIANT (SEE VARIANT PARTS LIST)			
C1242		VARIANT (SEE VARIANT PARTS LIST)			
C1243		VARIANT (SEE VARIANT PARTS LIST)			
C1244		VARIANT (SEE VARIANT PARTS LIST)			
C1245		VARIANT (SEE VARIANT PARTS LIST)			
C1261		VARIANT (SEE VARIANT PARTS LIST)			
C1262		VARIANT (SEE VARIANT PARTS LIST)			
C1263		VARIANT (SEE VARIANT PARTS LIST)			
C1264		VARIANT (SEE VARIANT PARTS LIST)			
C1267		VARIANT (SEE VARIANT PARTS LIST)			
C1268		VARIANT (SEE VARIANT PARTS LIST)			
C1269		VARIANT (SEE VARIANT PARTS LIST)			
C1293		VARIANT (SEE VARIANT PARTS LIST)			
C1351	1-163-251-11	CERAMIC	100pF	5%	50V
C1352	1-126-933-11	ELECT	100µF	20%	16V
C1353	1-163-037-11	CERAMIC	0.022µF	10%	50V
C1354	1-216-295-91	SHORT			

Note:

The components identified by shading and mark ⚠ are critical for safety. Replace only with part number specified.

Note:

Les composants identifies per un trame et une marque ⚠ sont critiques pour la securite. Ne les remplacer que par une piece portant le numero specifie.

Common Parts Listing

A

REF.NO.		PART NO.	DESCRIPTION	REMARK
C1401			VARIANT (SEE VARIANT PARTS LIST)	
C1402			VARIANT (SEE VARIANT PARTS LIST)	
C1403			VARIANT (SEE VARIANT PARTS LIST)	
C1404			VARIANT (SEE VARIANT PARTS LIST)	
C1405			VARIANT (SEE VARIANT PARTS LIST)	
C1406			VARIANT (SEE VARIANT PARTS LIST)	
C1407			VARIANT (SEE VARIANT PARTS LIST)	
C1408			VARIANT (SEE VARIANT PARTS LIST)	
C1409			VARIANT (SEE VARIANT PARTS LIST)	
C1410			VARIANT (SEE VARIANT PARTS LIST)	
C1411			VARIANT (SEE VARIANT PARTS LIST)	
C1413			VARIANT (SEE VARIANT PARTS LIST)	
C1415			VARIANT (SEE VARIANT PARTS LIST)	
C1416			VARIANT (SEE VARIANT PARTS LIST)	
C1417			VARIANT (SEE VARIANT PARTS LIST)	
C1420			VARIANT (SEE VARIANT PARTS LIST)	
C1501			VARIANT (SEE VARIANT PARTS LIST)	
		CONNECTOR		
CN106		1-508-784-00	PIN,CONNECTOR(5MM PITCH) 1P	
CN270		1-573-298-11	CONNECTOR,BOARD TO BOARD 20P	
CN271			VARIANT (SEE VARIANT PARTS LIST)	
CN351		1-564-509-11	PLUG, CONNECTOR 6P	
CN461		1-564-507-11	PLUG,CONNECTOR 4P	
CN501		1-580-798-11	CONNECTOR PIN (DY) 6P	
CN503		1-564-508-11	PLUG,CONNECTOR 5P	
CN1001	*	1-564-512-11	PLUG,CONNECTOR 9P	
CN1101			VARIANT (SEE VARIANT PARTS LIST)	
CN1231			VARIANT (SEE VARIANT PARTS LIST)	
CN1641	*	1-564-515-11	PLUG,CONNECTOR 12P	
CN1941			VARIANT (SEE VARIANT PARTS LIST)	
CN3003			VARIANT (SEE VARIANT PARTS LIST)	
		DIODE		
D001		8-719-991-33	DIODE	1SS133T-77
D002		8-719-109-89	DIODE	RD5.6ESB2
D003		8-719-991-33	DIODE	1SS133T-77
D004		8-719-110-17	DIODE	RD10ESB2
D005			VARIANT (SEE VARIANT PARTS LIST)	
D006			VARIANT (SEE VARIANT PARTS LIST)	
D011		8-719-983-20	DIODE	MTZJ-T-77-4.3C
D013		8-719-991-33	DIODE	1SS133T-77
D014		8-719-991-33	DIODE	1SS133T-77
D015		8-719-991-33	DIODE	1SS133T-77
D353		8-719-991-33	DIODE	1SS133T-77
D356		8-719-991-33	DIODE	1SS133T-77
D360		8-719-110-17	DIODE	RD10ESB2
D362		8-719-991-33	DIODE	1SS133T-77
D368			VARIANT (SEE VARIANT PARTS LIST)	
D462		8-719-991-33	DIODE	1SS133T-77
D501		8-719-109-89	DIODE	RD5.6ESB2
D502	⚠	8-719-945-80	DIODE	ERC06-15S
D503	⚠	8-719-945-80	DIODE	ERC06-15S
D504		8-719-900-26	DIODE	ERD29-08J
D505		8-719-908-03	DIODE	GP08D
D506		8-719-908-03	DIODE	GP08D
D507		8-719-991-33	DIODE	1SS133T-77
D515		8-719-302-43	DIODE	EL1Z
D516		8-719-991-33	DIODE	1SS133T-77
D518		8-719-991-33	DIODE	1SS133T-77
D519	⚠	8-719-302-43	DIODE	EL1Z
D520		8-719-991-33	DIODE	1SS133T-77
D521		8-719-921-63	DIODE	MTZJ-7.5B
D530	⚠	8-719-979-85	DIODE	EGP20G
D531		8-719-979-85	DIODE	EGP20G
D534		8-719-302-43	DIODE	EL1Z
D536		8-719-908-03	DIODE	GP08D
D561		8-719-908-03	DIODE	GP08D
D562		8-719-991-33	DIODE	1SS133T-77
D1102		8-719-982-24	DIODE	MTZJ-33A
D1103	⚠	8-719-109-89	DIODE	RD5.6ESB2
D1247			VARIANT (SEE VARIANT PARTS LIST)	
D1248			VARIANT (SEE VARIANT PARTS LIST)	
D1261			VARIANT (SEE VARIANT PARTS LIST)	
D1262			VARIANT (SEE VARIANT PARTS LIST)	
D1263		8-719-110-17	DIODE	RD10ESB2
D1264		8-719-110-17	DIODE	RD10ESB2
		FERRITE BEAD		
FB501		1-410-396-41	FERRITE	0.45µH
FB502		1-410-397-21	FERRITE	1.1µH
FB503		1-410-397-21	FERRITE	1.1µH
		IC		
IC001		8-752-906-40	IC CXP85848A-028S	
IC002		8-759-518-23	IC ST24C04FM6TR	
IC003			VARIANT (SEE VARIANT PARTS LIST)	
IC351	⚠	8-752-082-73	IC CXA2095S	
IC461	⚠	8-759-980-43	IC TDA2009A	
IC501		8-759-700-07	IC NJM2903M-TE2	
IC561	⚠	8-759-980-58	IC TDA8172	
IC1261			VARIANT (SEE VARIANT PARTS LIST)	
IC1401			VARIANT (SEE VARIANT PARTS LIST)	
IC1402			VARIANT (SEE VARIANT PARTS LIST)	
		JACK		
J1232			VARIANT (SEE VARIANT PARTS LIST)	
J1233			VARIANT (SEE VARIANT PARTS LIST)	
J1234			VARIANT (SEE VARIANT PARTS LIST)	
		CHIP CONDUCTOR		
JR001			VARIANT (SEE VARIANT PARTS LIST)	
JR200			VARIANT (SEE VARIANT PARTS LIST)	
JR351			VARIANT (SEE VARIANT PARTS LIST)	

A Common Parts Listing

Note:

The components identified by shading and mark ⚠ are critical for safety. Replace only with part number specified.

Note:

Les composants identifies per un trame et une marque ⚠ sont critiques pour la securite. Ne les remplacer que par une piece portant le numero specifie.

REF.NO.	PART NO.	DESCRIPTION	REMARK
JR352		VARIANT (SEE VARIANT PARTS LIST)	
JR501	1-216-295-91	SHORT	
JR1264		VARIANT (SEE VARIANT PARTS LIST)	
JR1417		VARIANT (SEE VARIANT PARTS LIST)	
JR1450		VARIANT (SEE VARIANT PARTS LIST)	
JR1451		VARIANT (SEE VARIANT PARTS LIST)	
JR1454	1-216-295-91	SHORT	
JR1456	1-216-295-91	SHORT	
JR1801	1-216-295-91	SHORT	
JR1802	1-216-295-91	SHORT	
JR1803	1-216-295-91	SHORT	
JR1804	1-216-295-91	SHORT	
JR4120	1-216-295-91	SHORT	
	COIL		
L001	1-408-421-00	INDUCTOR 100µH	
L002	1-408-421-00	INDUCTOR 100µH	
L003	1-410-470-11	INDUCTOR 10µH	
L004	1-410-470-11	INDUCTOR 10µH	
L352	1-412-537-31	INDUCTOR 100µH	
L461		VARIANT (SEE VARIANT PARTS LIST)	
L501	⚠ 1-411-976-11	COIL,HORIZONTAL LINEARITY	
L502	1-412-552-11	INDUCTOR 2.2µH	
L503	1-406-677-11	INDUCTOR 10µH	
L511	⚠ 1-406-607-41	INDUCTOR 15µH	
L517	1-412-552-11	INDUCTOR 2.2µH	
L541		VARIANT (SEE VARIANT PARTS LIST)	
L1101	1-408-421-00	INDUCTOR 100µH	
L1102	1-410-470-11	INDUCTOR 10µH	
L1401		VARIANT (SEE VARIANT PARTS LIST)	
	IC LINK		
PS461	⚠ 1-532-984-11	LINK, IC 2A/90V	
	TRANSISTOR		
Q001	8-729-216-22	TRANSISTOR 2SA1162-G	
Q002	8-729-422-27	TRANSISTOR 2SD601A-Q	
Q003	8-729-422-27	TRANSISTOR 2SD601A-Q	
Q004	8-729-216-22	TRANSISTOR 2SA1162-G	
Q010	8-729-422-27	TRANSISTOR 2SD601A-Q	
Q011	8-729-422-27	TRANSISTOR 2SD601A-Q	
Q012	8-729-422-27	TRANSISTOR 2SD601A-Q	
Q013	8-729-422-27	TRANSISTOR 2SD601A-Q	
Q014	8-729-422-27	TRANSISTOR 2SD601A-Q	
Q015	8-729-422-27	TRANSISTOR 2SD601A-Q	
Q016	8-729-422-27	TRANSISTOR 2SD601A-Q	
Q017	8-729-216-22	TRANSISTOR 2SA1162-G	
Q018		VARIANT (SEE VARIANT PARTS LIST)	
Q301	⚠ 8-729-216-22	TRANSISTOR 2SA1162-G	
Q302	⚠ 8-729-216-22	TRANSISTOR 2SA1162-G	
Q303	⚠ 8-729-216-22	TRANSISTOR 2SA1162-G	
Q354	8-729-422-27	TRANSISTOR 2SD601A-Q	

REF.NO.	PART NO.	DESCRIPTION	REMARK
Q356	8-729-216-22	TRANSISTOR 2SA1162-G	
Q357	8-729-422-27	TRANSISTOR 2SD601A-Q	
Q358	8-729-422-27	TRANSISTOR 2SD601A-Q	
Q461	8-729-422-27	TRANSISTOR 2SD601A-Q	
Q462	8-729-216-22	TRANSISTOR 2SA1162-G	
Q501	8-729-140-50	TRANSISTOR 2SC3209LK	
Q502	⚠ 8-729-035-75	TRANSISTOR 2SC5148(LBSONY)	
Q511	8-729-422-27	TRANSISTOR 2SD601A-Q	
Q512	⚠ 8-729-809-29	TRANSISTOR 2SC4159-E	
Q551	8-729-216-22	TRANSISTOR 2SA1162-G	
Q552	8-729-422-27	TRANSISTOR 2SD601A-Q	
Q561	8-729-422-27	TRANSISTOR 2SD601A-Q	
Q562	8-729-422-27	TRANSISTOR 2SD601A-Q	
Q563	8-729-105-08	TRANSISTOR 2SA1330-06	
Q1102	8-729-119-78	TRANSISTOR 2SC2785-HFE	
Q1103	8-729-422-27	TRANSISTOR 2SD601A-Q	
Q1231		VARIANT (SEE VARIANT PARTS LIST)	
Q1232		VARIANT (SEE VARIANT PARTS LIST)	
Q1261		VARIANT (SEE VARIANT PARTS LIST)	
Q1262		VARIANT (SEE VARIANT PARTS LIST)	
Q1263		VARIANT (SEE VARIANT PARTS LIST)	
	RESISTOR		
R001	1-216-045-00	RES,CHIP 680 5% 1/10W	
R002	1-247-815-91	CARBON 220 5% 1/4W	
R003	1-216-097-91	RES,CHIP 100K 5% 1/10W	
R004	1-216-121-91	RES,CHIP 1M 5% 1/10W	
R006		VARIANT (SEE VARIANT PARTS LIST)	
R007	1-216-073-00	RES,CHIP 10K 5% 1/10W	
R008		VARIANT (SEE VARIANT PARTS LIST)	
R009	1-216-073-00	RES,CHIP 10K 5% 1/10W	
R010	1-216-037-00	RES,CHIP 330 5% 1/10W	
R011	1-216-065-91	RES,CHIP 4.7K 5% 1/10W	
R012		VARIANT (SEE VARIANT PARTS LIST)	
R013	1-216-065-91	RES,CHIP 4.7K 5% 1/10W	
R014	1-216-065-91	RES,CHIP 4.7K 5% 1/10W	
R015	1-216-073-00	RES,CHIP 10K 5% 1/10W	
R016	1-216-073-00	RES,CHIP 10K 5% 1/10W	
R019	1-249-425-11	CARBON 4.7K 5% 1/4W	
R020	1-216-065-91	RES,CHIP 4.7K 5% 1/10W	
R021	1-216-033-00	RES,CHIP 220 5% 1/10W	
R022	1-249-429-11	CARBON 10K 5% 1/4W	
R023	1-216-089-91	RES,CHIP 47K 5% 1/10W	
R024	⚠ 1-249-381-11	CARBON 1 5% 1/4W	F
R025	1-163-010-11	CERAMIC 0.0012 10% 50V	
R026	1-163-038-91	CERAMIC 0.1 25V	
R027	⚠ 1-249-389-11	CARBON 4.7 5% 1/4W	F
R028	1-249-417-11	CARBON 1K 5% 1/4W	
R029	1-216-025-91	RES,CHIP 100 5% 1/10W	
R030	1-249-425-11	CARBON 4.7K 5% 1/4W	

Note:

The components identified by shading and mark ⚠ are critical for safety. Replace only with part number specified.

Note:

Les composants identifies per un trame et une marque ⚠ sont critiques pour la securite. Ne les remplacer que par une piece portant le numero specifie.

Common Parts Listing

A

REF.NO.	PART NO.	DESCRIPTION				REMARK
R031		VARIANT (SEE VARIANT PARTS LIST)				
R032	1-247-815-91	CARBON	220	5%	1/4W	
R036	1-216-049-91	RES,CHIP	1K	5%	1/10W	
R037	1-216-049-91	RES,CHIP	1K	5%	1/10W	
R038	1-216-049-91	RES,CHIP	1K	5%	1/10W	
R039	1-247-807-31	CARBON	100	5%	1/4W	
R040		VARIANT (SEE VARIANT PARTS LIST)				
R041		VARIANT (SEE VARIANT PARTS LIST)				
R042		VARIANT (SEE VARIANT PARTS LIST)				
R044		VARIANT (SEE VARIANT PARTS LIST)				
R045		VARIANT (SEE VARIANT PARTS LIST)				
R046	1-247-815-91	CARBON	220	5%	1/4W	
R047	1-249-417-11	CARBON	1K	5%	1/4W	
R048	1-249-417-11	CARBON	1K	5%	1/4W	
R049	1-249-417-11	CARBON	1K	5%	1/4W	
R052	1-216-061-00	RES,CHIP	3.3K	5%	1/10W	
R053	1-216-061-00	RES,CHIP	3.3K	5%	1/10W	
R054	1-216-061-00	RES,CHIP	3.3K	5%	1/10W	
R055	1-216-097-91	RES,CHIP	100K	5%	1/10W	
R056	1-216-033-00	RES,CHIP	220	5%	1/10W	
R057	1-249-417-11	CARBON	1K	5%	1/4W	
R058	1-216-033-00	RES,CHIP	220	5%	1/10W	
R059		VARIANT (SEE VARIANT PARTS LIST)				
R060		VARIANT (SEE VARIANT PARTS LIST)				
R061		VARIANT (SEE VARIANT PARTS LIST)				
R062		VARIANT (SEE VARIANT PARTS LIST)				
R063		VARIANT (SEE VARIANT PARTS LIST)				
R064	1-216-033-00	RES,CHIP	220	5%	1/10W	
R065	1-216-033-00	RES,CHIP	220	5%	1/10W	
R066	1-216-033-00	RES,CHIP	220	5%	1/10W	
R067	1-216-041-00	RES,CHIP	470	5%	1/10W	
R068	1-247-815-91	CARBON	220	5%	1/4W	
R069		VARIANT (SEE VARIANT PARTS LIST)				
R070	1-249-421-11	CARBON	2.2K	5%	1/4W	
R071	1-247-815-91	CARBON	220	5%	1/4W	
R072	1-216-033-00	RES,CHIP	220	5%	1/10W	
R073	1-216-033-00	RES,CHIP	220	5%	1/10W	
R074		VARIANT (SEE VARIANT PARTS LIST)				
R075		VARIANT (SEE VARIANT PARTS LIST)				
R076	1-216-033-00	RES,CHIP	220	5%	1/10W	
R077	1-216-033-00	RES,CHIP	220	5%	1/10W	
R078	1-249-417-11	CARBON	1K	5%	1/4W	
R079	1-216-033-00	RES,CHIP	220	5%	1/10W	
R080	1-216-065-91	RES,CHIP	4.7K	5%	1/10W	
R081	1-216-025-91	RES,CHIP	100	5%	1/10W	
R082	1-216-025-91	RES,CHIP	100	5%	1/10W	
R083	1-249-429-11	CARBON	10K	5%	1/4W	
R084	1-216-049-91	RES,CHIP	1K	5%	1/10W	
R085		VARIANT (SEE VARIANT PARTS LIST)				
R087	1-247-815-91	CARBON	220	5%	1/4W	
R089		VARIANT (SEE VARIANT PARTS LIST)				
R090		VARIANT (SEE VARIANT PARTS LIST)				
R092	1-249-429-11	CARBON	10K	5%	1/4W	
R093	⚠ 1-249-387-11	CARBON	3.3	5%	1/4W	F
R094	⚠ 1-249-381-11	CARBON	1	5%	1/4W	F
R096	1-216-351-00	METAL	1.5	5%	1W	F
R097	1-216-065-91	RES,CHIP	4.7K	5%	1/10W	
R098		VARIANT (SEE VARIANT PARTS LIST)				
R099	1-216-065-91	RES,CHIP	4.7K	5%	1/10W	
R101	⚠ 1-249-381-11	CARBON	1	5%	1/4W	F
R102		VARIANT (SEE VARIANT PARTS LIST)				
R104		VARIANT (SEE VARIANT PARTS LIST)				
R131	1-216-035-00	RES,CHIP	270	5%	1/10W	
R132	1-216-115-00	RES,CHIP	560K	5%	1/10W	
R133	1-216-039-00	RES,CHIP	390	5%	1/10W	
R135	1-216-073-00	RES,CHIP	10K	5%	1/10W	
R136	1-216-073-00	RES,CHIP	10K	5%	1/10W	
R137	1-216-049-91	RES,CHIP	1K	5%	1/10W	
R353	1-208-788-11	RES,CHIP	1.8K	0.50%	1/10W	
R354	1-216-077-91	RES,CHIP	15K	5%	1/10W	
R355	1-216-033-00	RES,CHIP	220	5%	1/10W	
R356	1-216-033-00	RES,CHIP	220	5%	1/10W	
R358		VARIANT (SEE VARIANT PARTS LIST)				
R359		VARIANT (SEE VARIANT PARTS LIST)				
R360		VARIANT (SEE VARIANT PARTS LIST)				
R361	1-216-025-91	RES,CHIP	100	5%	1/10W	
R362	1-216-025-91	RES,CHIP	100	5%	1/10W	
R363	⚠ 1-216-025-91	RES,CHIP	100	5%	1/10W	
R364	1-216-101-00	RES,CHIP	150K	5%	1/10W	
R365		VARIANT (SEE VARIANT PARTS LIST)				
R366	1-216-089-91	RES,CHIP	47K	5%	1/10W	
R367	1-216-097-91	RES,CHIP	100K	5%	1/10W	
R368	1-249-441-11	CARBON	100K	5%	1/4W	
R369	1-216-097-91	RES,CHIP	100K	5%	1/10W	
R370	1-249-417-11	CARBON	1K	5%	1/4W	
R371	1-216-053-00	RES,CHIP	1.5K	5%	1/10W	
R372	1-216-113-00	RES,CHIP	470K	5%	1/10W	
R373	1-216-073-00	RES,CHIP	10K	5%	1/10W	
R374		VARIANT (SEE VARIANT PARTS LIST)				
R375	1-216-025-91	RES,CHIP	100	5%	1/10W	
R376	1-216-073-00	RES,CHIP	10K	5%	1/10W	
R379	1-216-033-00	RES,CHIP	220	5%	1/10W	
R380	1-247-815-91	CARBON	220	5%	1/4W	
R381	1-247-815-91	CARBON	220	5%	1/4W	
R382	1-216-033-00	RES,CHIP	220	5%	1/10W	
R383	1-216-049-91	RES,CHIP	1K	5%	1/10W	
R384	1-216-109-00	RES,CHIP	330K	5%	1/10W	
R385	1-249-422-11	CARBON	2.7K	5%	1/4W	

A

Note:

The components identified by shading and mark ⚠ are critical for safety. Replace only with part number specified.

Note:

The components identified by ⧓ in this manual have been carefully factory-selected for each set in order to satisfy regulations regarding x-ray radiation. Should replacement be required, replace only with the value originally used.

REF.NO.	PART NO.	DESCRIPTION				REMARK
R386		VARIANT (SEE VARIANT PARTS LIST)				
R387	1-216-049-91	RES,CHIP	1K	5%	1/10W	
R388	1-216-089-91	RES,CHIP	47K	5%	1/10W	
R389	1-216-067-00	RES,CHIP	5.6K	5%	1/10W	
R390	1-216-035-00	RES,CHIP	270	5%	1/10W	
R391	1-208-810-11	RES,CHIP	15K	0.50%	1/10W	
R392	1-216-025-91	RES,CHIP	100	5%	1/10W	
R393	1-216-043-91	RES,CHIP	560	5%	1/10W	
R394	1-216-059-00	RES,CHIP	2.7K	5%	1/10W	
R395	1-216-061-00	RES,CHIP	3.3K	5%	1/10W	
R396	1-249-417-11	CARBON	1K	5%	1/4W	
R397	1-249-425-11	CARBON	4.7K	5%	1/4W	
R461	1-216-065-91	RES,CHIP	4.7K	5%	1/10W	
R462	1-216-089-91	RES,CHIP	47K	5%	1/10W	
R463	1-249-435-11	CARBON	33K	5%	1/4W	
R464	1-216-097-91	RES,CHIP	100K	5%	1/10W	
R465	1-249-413-11	CARBON	470	5%	1/4W	
R466		VARIANT (SEE VARIANT PARTS LIST)				
R467	1-216-069-00	RES,CHIP	6.8K	5%	1/10W	
R469		VARIANT (SEE VARIANT PARTS LIST)				
R470	1-216-077-91	RES,CHIP	15K	5%	1/10W	
R471	1-216-069-00	RES,CHIP	6.8K	5%	1/10W	
R472		VARIANT (SEE VARIANT PARTS LIST)				
R473	1-249-398-11	CARBON	27	5%	1/4W	
R474	1-216-077-91	RES,CHIP	15K	5%	1/10W	
R475	1-249-430-11	CARBON	12K	5%	1/4W	
R476	1-249-430-11	CARBON	12K	5%	1/4W	
R477	1-249-398-11	CARBON	27	5%	1/4W	
R478	1-249-418-11	CARBON	1.2K	5%	1/4W	F
R479	1-249-418-11	CARBON	1.2K	5%	1/4W	F
R480	1-249-385-11	CARBON	2.2	5%	1/4W	F
R481	1-249-385-11	CARBON	2.2	5%	1/4W	F
R482	1-249-421-11	CARBON	2.2K	5%	1/4W	
R483	1-249-421-11	CARBON	2.2K	5%	1/4W	
R501	1-216-037-00	RES,CHIP	330	5%	1/10W	
R502	1-216-061-00	RES,CHIP	3.3K	5%	1/10W	
R503	1-249-426-11	CARBON	5.6K	5%	1/4W	F
R504	1-215-915-11	METAL	470	5%	3W	F
R505	1-249-431-11	CARBON	15K	5%	1/4W	
R506	1-215-861-00	METAL	47	5%	1W	F
R507	1-249-401-11	CARBON	47	5%	1/4W	
R508	1-249-427-11	CARBON	6.8K	5%	1/4W	
R509	1-247-750-11	CARBON	680	5%	1/2W	F
R510	1-215-860-11	METAL	33	5%	1W	F
R511		VARIANT (SEE VARIANT PARTS LIST)				
R512	1-215-911-11	METAL	100	5%	3W	F
R515		VARIANT (SEE VARIANT PARTS LIST)				
R516	1-216-057-00	RES,CHIP	2.2K	5%	1/10W	
R517	1-249-415-11	CARBON	680	5%	1/4W	

REF.NO.	PART NO.	DESCRIPTION				REMARK
R518	1-216-073-00	RES,CHIP	10K	5%	1/10W	
R519	1-249-411-11	CARBON	330	5%	1/4W	
R521	1-215-915-11	METAL	470	5%	3W	F
R523		VARIANT (SEE VARIANT PARTS LIST)				
R524	1-249-429-11	CARBON	10K	5%	1/4W	
R525	1-216-071-00	RES,CHIP	8.2K	5%	1/10W	
R528	1-216-081-00	RES,CHIP	22K	5%	1/10W	
R529		VARIANT (SEE VARIANT PARTS LIST)				
⧓ R530	⚠ 1-208-808-11	RES,CHIP	12K	0.50%	1/10W	
⧓ R531		VARIANT (SEE VARIANT PARTS LIST)				
R532	1-208-760-11	RES,CHIP	120	0.50%	1/10W	
R533		VARIANT (SEE VARIANT PARTS LIST)				
R535		VARIANT (SEE VARIANT PARTS LIST)				
R536	⚠ 1-249-377-11	CARBON	0.47	5%	1/4W	F
R537	⚠ 1-249-377-11	CARBON	0.47	5%	1/4W	F
R538	1-247-887-00	CARBON	220K	5%	1/4W	
R541		VARIANT (SEE VARIANT PARTS LIST)				
R542		VARIANT (SEE VARIANT PARTS LIST)				
R543	⚠ 1-249-377-11	CARBON	0.47	5%	1/4W	F
R546		VARIANT (SEE VARIANT PARTS LIST)				
R547	1-215-457-00	METAL	33K	1%	1/4W	
R549	⚠ 1-215-437-00	METAL	4.7K	1%	1/4W	
R550	⚠ 1-249-377-11	CARBON	0.47	5%	1/4W	F
R551	1-215-873-00	METAL	4.7K	5%	1W	F
R552	1-216-069-00	RES,CHIP	6.8K	5%	1/10W	
R553	⚠ 1-260-288-11	CARBON	0.47	5%	1/2W	
R554	1-216-057-00	RES,CHIP	2.2K	5%	1/10W	
R561	1-216-073-00	RES,CHIP	10K	5%	1/10W	
R563	1-216-351-00	METAL	1.5	5%	1W	F
R564	1-249-393-11	CARBON	10	5%	1/4W	
R565	1-215-890-11	METAL	470	5%	2W	F
R566	1-216-073-00	RES,CHIP	10K	5%	1/10W	
R567	1-249-385-11	CARBON	2.2	5%	1/4W	F
R568	1-216-073-00	RES,CHIP	10K	5%	1/10W	
R569	1-216-073-00	RES,CHIP	10K	5%	1/10W	
R570	1-216-097-91	RES,CHIP	100K	5%	1/10W	
R571	1-216-081-00	RES,CHIP	22K	5%	1/10W	
R572	1-216-081-00	RES,CHIP	22K	5%	1/10W	
R573	1-216-097-91	RES,CHIP	100K	5%	1/10W	
R574	⚠ 1-216-365-00	METAL	0.47	5%	2W	F
R575	1-216-113-00	RES,CHIP	470K	5%	1/10W	
R576	1-216-073-00	RES,CHIP	10K	5%	1/10W	
R577	1-216-097-91	RES,CHIP	100K	5%	1/10W	
R578	1-208-784-11	RES,CHIP	1.2K	0.50%	1/10W	
R579	1-208-842-11	RES,CHIP	330K	0.50%	1/10W	
R580	1-249-441-11	CARBON	100K	5%	1/4W	
R1009		VARIANT (SEE VARIANT PARTS LIST)				
R1010		VARIANT (SEE VARIANT PARTS LIST)				
R1101	1-216-049-91	RES,CHIP	1K	5%	1/10W	

Note:

The components identified by shading and mark ⚠ are critical for safety. Replace only with part number specified.

Note:

Les composants identifies per un trame et une marque ⚠ sont critiques pour la securite. Ne les remplacer que par une piece portant le numero specifie.

Common Parts Listing A

REF.NO.	PART NO.	DESCRIPTION		REMARK		
R1102	1-215-900-11	METAL	22K	5%	2W	F
R1103	1-216-051-00	RES,CHIP	1.2K	5%	1/10W	
R1104	1-216-083-00	RES,CHIP	27K	5%	1/10W	
R1105	1-216-689-11	RES,CHIP	39K	5%	1/10W	
R1106	1-216-049-91	RES,CHIP	1K	5%	1/10W	
R1107	1-216-065-91	RES,CHIP	4.7K	5%	1/10W	
R1108	1-216-073-00	RES,CHIP	10K	5%	1/10W	
R1109	1-216-019-00	RES,CHIP	56	5%	1/10W	
R1110	1-216-019-00	RES,CHIP	56	5%	1/10W	
R1111	1-216-019-00	RES,CHIP	56	5%	1/10W	
R1115	1-216-045-00	RES,CHIP	680	5%	1/10W	
R1117	1-249-425-11	CARBON	4.7K	5%	1/4W	
R1118	1-249-425-11	CARBON	4.7K	5%	1/4W	
R1120	1-216-057-00	RES,CHIP	2.2K	5%	1/10W	
R1121	1-216-035-00	RES,CHIP	270	5%	1/10W	
R1122	1-216-115-00	RES,CHIP	560K	5%	1/10W	
R1123	1-216-039-00	RES,CHIP	390	5%	1/10W	
R1125	1-216-057-00	RES,CHIP	2.2K	5%	1/10W	
R1126	1-216-035-00	RES,CHIP	270	5%	1/10W	
R1127	1-216-115-00	RES,CHIP	560K	5%	1/10W	
R1128	1-216-039-00	RES,CHIP	390	5%	1/10W	
R1130	1-216-057-00	RES,CHIP	2.2K	5%	1/10W	
R1234		VARIANT (SEE VARIANT PARTS LIST)				
R1240		VARIANT (SEE VARIANT PARTS LIST)				
R1241		VARIANT (SEE VARIANT PARTS LIST)				
R1242		VARIANT (SEE VARIANT PARTS LIST)				
R1243		VARIANT (SEE VARIANT PARTS LIST)				
R1244		VARIANT (SEE VARIANT PARTS LIST)				
R1245		VARIANT (SEE VARIANT PARTS LIST)				
R1246		VARIANT (SEE VARIANT PARTS LIST)				
R1247		VARIANT (SEE VARIANT PARTS LIST)				
R1248		VARIANT (SEE VARIANT PARTS LIST)				
R1249		VARIANT (SEE VARIANT PARTS LIST)				
R1250		VARIANT (SEE VARIANT PARTS LIST)				
R1251		VARIANT (SEE VARIANT PARTS LIST)				
R1252		VARIANT (SEE VARIANT PARTS LIST)				
R1253		VARIANT (SEE VARIANT PARTS LIST)				
R1254		VARIANT (SEE VARIANT PARTS LIST)				
R1255		VARIANT (SEE VARIANT PARTS LIST)				
R1256		VARIANT (SEE VARIANT PARTS LIST)				
R1257		VARIANT (SEE VARIANT PARTS LIST)				
R1258		VARIANT (SEE VARIANT PARTS LIST)				
R1259		VARIANT (SEE VARIANT PARTS LIST)				
R1260		VARIANT (SEE VARIANT PARTS LIST)				
R1261		VARIANT (SEE VARIANT PARTS LIST)				
R1262		VARIANT (SEE VARIANT PARTS LIST)				
R1263		VARIANT (SEE VARIANT PARTS LIST)				
R1264		VARIANT (SEE VARIANT PARTS LIST)				
R1265		VARIANT (SEE VARIANT PARTS LIST)				

REF.NO.	PART NO.	DESCRIPTION		REMARK	
R1266		VARIANT (SEE VARIANT PARTS LIST)			
R1267		VARIANT (SEE VARIANT PARTS LIST)			
R1268		VARIANT (SEE VARIANT PARTS LIST)			
R1270		VARIANT (SEE VARIANT PARTS LIST)			
R1273		VARIANT (SEE VARIANT PARTS LIST)			
R1274		VARIANT (SEE VARIANT PARTS LIST)			
R1277		VARIANT (SEE VARIANT PARTS LIST)			
R1278		VARIANT (SEE VARIANT PARTS LIST)			
R1280		VARIANT (SEE VARIANT PARTS LIST)			
R1282		VARIANT (SEE VARIANT PARTS LIST)			
R1283		VARIANT (SEE VARIANT PARTS LIST)			
R1284		VARIANT (SEE VARIANT PARTS LIST)			
R1286		VARIANT (SEE VARIANT PARTS LIST)			
R1287		VARIANT (SEE VARIANT PARTS LIST)			
R1288		VARIANT (SEE VARIANT PARTS LIST)			
R1290		VARIANT (SEE VARIANT PARTS LIST)			
R1291		VARIANT (SEE VARIANT PARTS LIST)			
R1292		VARIANT (SEE VARIANT PARTS LIST)			
R1293		VARIANT (SEE VARIANT PARTS LIST)			
R1294		VARIANT (SEE VARIANT PARTS LIST)			
R1295		VARIANT (SEE VARIANT PARTS LIST)			
R1296		VARIANT (SEE VARIANT PARTS LIST)			
R1351	1-247-815-91	CARBON	220	5%	1/4W
R1352	1-247-815-91	CARBON	220	5%	1/4W
R1353	1-247-815-91	CARBON	220	5%	1/4W
R1354	1-216-033-00	RES,CHIP	220	5%	1/10W
R1355	1-216-025-91	RES,CHIP	100	5%	1/10W
R1356	1-216-025-91	RES,CHIP	100	5%	1/10W
R1357	1-216-025-91	RES,CHIP	100	5%	1/10W
R1358	1-247-807-31	CARBON	100	5%	1/4W
R1359	1-216-025-91	RES,CHIP	100	5%	1/10W
R1360	1-216-069-00	RES,CHIP	6.8K	5%	1/10W
R1361	1-216-065-91	RES,CHIP	4.7K	5%	1/10W
R1362	1-216-295-91	SHORT			
R1407		VARIANT (SEE VARIANT PARTS LIST)			
R1410		VARIANT (SEE VARIANT PARTS LIST)			
R1411		VARIANT (SEE VARIANT PARTS LIST)			
R1412		VARIANT (SEE VARIANT PARTS LIST)			
R1413		VARIANT (SEE VARIANT PARTS LIST)			
R1414		VARIANT (SEE VARIANT PARTS LIST)			
R1415		VARIANT (SEE VARIANT PARTS LIST)			
R1418		VARIANT (SEE VARIANT PARTS LIST)			
R1419		VARIANT (SEE VARIANT PARTS LIST)			
R1420		VARIANT (SEE VARIANT PARTS LIST)			
R1421		VARIANT (SEE VARIANT PARTS LIST)			
R1424		VARIANT (SEE VARIANT PARTS LIST)			
R1425		VARIANT (SEE VARIANT PARTS LIST)			

A Common Parts Listing

Note:

The components identified by shading and mark ⚠ are critical for safety. Replace only with part number specified.

Note:

Les composants identifies per un trame et une marque ⚠ sont critiques pour la securite. Ne les remplacer que par une piece portant le numero specifie.

REF.NO.		PART NO.	DESCRIPTION	REMARK
		SWITCH		
S001			VARIANT (SEE VARIANT PARTS LIST)	
S002			VARIANT (SEE VARIANT PARTS LIST)	
S003			VARIANT (SEE VARIANT PARTS LIST)	
S004			VARIANT (SEE VARIANT PARTS LIST)	
S005			VARIANT (SEE VARIANT PARTS LIST)	
S006			VARIANT (SEE VARIANT PARTS LIST)	
S007			VARIANT (SEE VARIANT PARTS LIST)	
S501		1-572-707-11	SWITCH, LEVER	
		TRANSFORMER		
T501		1-437-210-11	TRANSFORMER,HORIZONTAL DRIVE	
T502			VARIANT (SEE VARIANT PARTS LIST)	
T503			VARIANT (SEE VARIANT PARTS LIST)	
T504			VARIANT (SEE VARIANT PARTS LIST)	
		TUNER		
TU102	⚠	8-598-431-00	TUNER, FSS BTF-WA411	
		CRYSTAL		
X001		1-578-774-11	VIBRATOR, CRYSTAL	
X353		1-567-505-11	OSCILLATOR, CRYSTAL	
X354		1-577-611-11	OSCILLATOR, CERAMIC	

REF.NO.	PART NO.	DESCRIPTION	REMARK

Note:

The components identified by shading and mark ⚠ are critical for safety. Replace only with part number specified.

Note:

Les composants identifies per un trame et une marque ⚠ sont critiques pour la securite. Ne les remplacer que par une piece portant le numero specifie.

Variant Parts Listing

A

The parts on this page belong to the following model(s) only:

KV-32S42

A-Board Variant Parts List KV-32S42

REF.NO.		PART NO.	DESCRIPTION			REMARK
*		A-1299-001-A	A COMPLETE PC BOARD			
		CAPACITOR				
C068		1-164-096-11	CERAMIC	0.01µF		50V
C370		1-163-037-11	CERAMIC	0.022µF	10%	50V
C375		1-165-319-11	CERAMIC	0.1µF		50V
C461		1-126-933-11	ELECT	100µF	20%	16V
C513	⚠	1-130-895-00	FILM	0.056µF	5%	400V
C514	⚠	1-104-844-11	FILM	0.62µF	5%	200V
C520		1-164-645-11	CERAMIC	1000pF	10%	500V
C521		1-164-161-11	CERAMIC	0.0022µF	10%	50V
C537		1-126-941-11	ELECT	470µF	20%	25V
C539		1-126-935-11	ELECT	470µF	20%	16V
C1236		1-163-031-11	CERAMIC	0.01µF		50V
C1237		1-136-161-00	FILM	0.047µF	5%	50V
C1238		1-136-161-00	FILM	0.047µF	5%	50V
C1239		1-126-960-11	ELECT	1µF	20%	50V
C1240		1-126-960-11	ELECT	1µF	20%	50V
C1244		1-126-959-11	ELECT	0.47µF	20%	50V
C1245		1-126-959-11	ELECT	0.47µF	20%	50V
C1261		1-104-664-11	ELECT	47µF	20%	16V
C1262		1-104-664-11	ELECT	47µF	20%	16V
C1263		1-126-960-11	ELECT	1µF	20%	50V
C1264		1-126-960-11	ELECT	1µF	20%	50V
C1267		1-136-161-00	FILM	0.047µF	5%	50V
C1268		1-126-960-11	ELECT	1µF	20%	50V
C1269		1-126-960-11	ELECT	1µF	20%	50V
C1293		1-163-251-11	CERAMIC	100pF	5%	50V
C1401		1-126-959-11	ELECT	0.47µF	20%	50V
C1402		1-104-664-11	ELECT	47µF	20%	25V
C1403		1-126-959-11	ELECT	0.47µF	20%	50V
C1404		1-126-956-91	ELECT	0.1µF	20%	50V
C1405		1-163-017-00	CERAMIC	0.0047µF	10%	50V
C1406		1-126-956-91	ELECT	0.1µF	20%	50V
C1407		1-163-017-00	CERAMIC	0.0047µF	10%	50V
C1408		1-126-963-11	ELECT	4.7µF	20%	50V
C1409		1-126-963-11	ELECT	4.7µF	20%	50V
C1410		1-126-956-91	ELECT	0.1µF	20%	50V
C1411		1-165-319-11	CERAMIC	0.1µF		50V
C1413		1-126-963-11	ELECT	4.7µF	20%	50V
C1415		1-126-964-11	ELECT	10µF	20%	50V
C1416		1-126-963-11	ELECT	4.7µF	20%	50V
C1417		1-126-767-11	ELECT	1000µF	20%	16V
C1420		1-126-963-11	ELECT	4.7µF	20%	50V
C1501		1-115-462-11	FILM	0.12µF	5%	200V

REF.NO.		PART NO.	DESCRIPTION				REMARK
		CONNECTOR					
CN1941	*	1-564-508-11	PLUG, CONNECTOR 5P				
		DIODE					
D005		8-719-991-33	DIODE	1SS133T-77			
D006		1-810-039-31	LED UNIT				
D1247		8-719-110-17	DIODE	RD10ESB2			
D1248		8-719-981-99	DIODE	MTZJ-3.3			
D1261		8-719-110-17	DIODE	RD10ESB2			
D1262		8-719-110-17	DIODE	RD10ESB2			
		IC					
IC003		8-742-134-00	HYB IC SBX1981-51P				
IC1261		8-759-366-77	IC MM1311AD				
IC1401		8-752-072-39	IC CXA2021S				
IC1402		8-759-100-96	IC UPC4558G2				
		JACK					
J1232		1-774-751-11	TERMINAL BLOCK, S				
J1234		1-774-750-11	JACK BLOCK, PIN				
		CHIP CONDUCTOR					
JR351		1-216-295-91	SHORT				
JR352		1-216-295-91	SHORT				
JR1264		1-216-295-91	SHORT				
JR1450		1-216-295-91	SHORT				
JR1451		1-216-295-91	SHORT				
		COIL					
L461		1-408-602-31	INDUCTOR	8.2µH			
L1401		1-410-494-11	INDUCTOR	1µH			
		TRANSISTOR					
Q1231		8-729-422-27	TRANSISTOR	2SD601A-Q			
Q1232		8-729-422-27	TRANSISTOR	2SD601A-Q			
Q1261		8-729-216-22	TRANSISTOR	2SA1162-G			
Q1262		8-729-216-22	TRANSISTOR	2SA1162-G			
Q1263		8-729-422-27	TRANSISTOR	2SD601A-Q			
		RESISTOR					
R044		1-216-033-00	RES,CHIP	220	5%	1/10W	
R059		1-216-047-91	RES,CHIP	820	5%	1/10W	
R060		1-216-049-91	RES,CHIP	1K	5%	1/10W	
R061		1-216-055-00	RES,CHIP	1.8K	5%	1/10W	
R062		1-216-065-91	RES,CHIP	4.7K	5%	1/10W	
R063		1-216-073-00	RES,CHIP	10K	5%	1/10W	
R074		1-216-033-00	RES,CHIP	220	5%	1/10W	
R075		1-216-033-00	RES,CHIP	220	5%	1/10W	
R098	⚠	1-249-385-11	CARBON	2.2	5%	1/4W	F
R365		1-216-101-00	RES,CHIP	150K	5%	1/10W	
R374		1-216-125-00	RES,CHIP	1.5M	5%	1/10W	
R466		1-249-388-11	CARBON	3.9	5%	1/4W	F
R469		1-216-069-00	RES,CHIP	6.8K	5%	1/10W	
R472		1-216-069-00	RES,CHIP	6.8K	5%	1/10W	
R511		1-215-885-00	METAL	68	5%	2W	F

A

Variant Parts Listing

The parts on this page belong to the following model(s) only:

KV-32S42

Note:

The components identified by shading and mark ⚠ are critical for safety. Replace only with part number specified.

Note:

The components identified by ⧓ in this manual have been carefully factory-selected for each set in order to satisfy regulations regarding x-ray radiation. Should replacement be required, replace only with the value originally used.

REF.NO.	PART NO.	DESCRIPTION				REMARK
R515	1-216-083-00	RES,CHIP	27K	5%	1/10W	
R523	1-216-073-00	RES,CHIP	10K	5%	1/10W	
R529	1-208-814-91	RES,CHIP	22K	0.50%	1/10W	
⧓ R531 ⚠	1-208-826-11	RES,CHIP	68K	0.50%	1/10W	
R533	1-215-902-11	METAL	47K	5%	1W	F
R535	1-216-101-00	RES,CHIP	150K	5%	1/10W	
R546	1-215-453-00	METAL	22K	1%	1/4W	
R1009	1-216-033-00	RES,CHIP	220	5%	1/10W	
R1010	1-216-033-00	RES,CHIP	220	5%	1/10W	
R1234	1-249-441-11	CARBON	100K	5%	1/4W	
R1240	1-216-022-00	RES,CHIP	75	5%	1/10W	
R1241	1-216-022-00	RES,CHIP	75	5%	1/10W	
R1242	1-216-065-91	RES,CHIP	4.7K	5%	1/10W	
R1243	1-249-441-11	CARBON	100K	5%	1/4W	
R1244	1-216-022-00	RES,CHIP	75	5%	1/10W	
R1245	1-216-113-00	RES,CHIP	470K	5%	1/10W	
R1246	1-216-065-91	RES,CHIP	4.7K	5%	1/10W	
R1247	1-216-113-00	RES,CHIP	470K	5%	1/10W	
R1248	1-216-065-91	RES,CHIP	4.7K	5%	1/10W	
R1254	1-216-113-00	RES,CHIP	470K	5%	1/10W	
R1255	1-216-049-91	RES,CHIP	1K	5%	1/10W	
R1256	1-216-113-00	RES,CHIP	470K	5%	1/10W	
R1257	1-216-049-91	RES,CHIP	1K	5%	1/10W	
R1258	1-216-061-00	RES,CHIP	3.3K	5%	1/10W	
R1259	1-216-097-91	RES,CHIP	100K	5%	1/10W	
R1260	1-216-061-00	RES,CHIP	3.3K	5%	1/10W	
R1261	1-216-033-00	RES,CHIP	220	5%	1/10W	
R1262	1-216-025-91	RES,CHIP	100	5%	1/10W	
R1263	1-216-033-00	RES,CHIP	220	5%	1/10W	
R1264	1-216-025-91	RES,CHIP	100	5%	1/10W	
R1265	1-216-033-00	RES,CHIP	220	5%	1/10W	
R1266	1-216-025-91	RES,CHIP	100	5%	1/10W	
R1267	1-216-295-91	SHORT				
R1268	1-216-025-91	RES,CHIP	100	5%	1/10W	
R1270	1-216-025-91	RES,CHIP	100	5%	1/10W	
R1277	1-247-815-91	CARBON	220	5%	1/4W	
R1278	1-247-815-91	CARBON	220	5%	1/4W	
R1280	1-216-025-91	RES,CHIP	100	5%	1/10W	
R1282	1-216-025-91	RES,CHIP	100	5%	1/10W	
R1284	1-247-807-31	CARBON	100	5%	1/4W	
R1286	1-216-049-91	RES,CHIP	1K	5%	1/10W	
R1287	1-216-049-91	RES,CHIP	1K	5%	1/10W	
R1288	1-247-807-31	CARBON	100	5%	1/4W	
R1290	1-216-041-00	RES,CHIP	470	5%	1/10W	
R1291	1-216-045-00	RES,CHIP	680	5%	1/10W	
R1292	1-216-065-91	RES,CHIP	4.7K	5%	1/10W	
R1293	1-216-065-91	RES,CHIP	4.7K	5%	1/10W	
R1294	1-216-049-91	RES,CHIP	1K	5%	1/10W	
R1295	1-216-049-91	RES,CHIP	1K	5%	1/10W	
R1407	1-216-073-00	RES,CHIP	10K	5%	1/10W	
R1410	1-216-121-91	RES,CHIP	1M	5%	1/10W	
R1411	1-216-073-00	RES,CHIP	10K	5%	1/10W	
R1412	1-216-081-00	RES,CHIP	22K	5%	1/10W	
R1413	1-216-089-91	RES,CHIP	47K	5%	1/10W	
R1414	1-216-089-91	RES,CHIP	47K	5%	1/10W	
R1415	1-216-025-91	RES,CHIP	100	5%	1/10W	
R1418	1-216-081-00	RES,CHIP	22K	5%	1/10W	
R1419	1-216-089-91	RES,CHIP	47K	5%	1/10W	
R1420	1-216-089-91	RES,CHIP	47K	5%	1/10W	
R1421	1-216-025-91	RES,CHIP	100	5%	1/10W	
R1424	1-247-815-91	CARBON	220	5%	1/4W	
R1425	1-247-815-91	CARBON	220	5%	1/4W	
	SWITCH					
S001	1-692-431-21	SWITCH, TACTILE				
S002	1-692-431-21	SWITCH, TACTILE				
S003	1-692-431-21	SWITCH, TACTILE				
S004	1-692-431-21	SWITCH, TACTILE				
S005	1-692-431-21	SWITCH, TACTILE				
S006	1-692-431-21	SWITCH, TACTILE				
S007	1-692-431-21	SWITCH, TACTILE				
	TRANSFORMER					
T502 ⚠	1-424-545-11	TRANSFORMER,FERRITE (PMT)				
T503 ⚠	1-453-207-11	FBT ASSY, NX-2609//X4C				

Note:

The components identified by shading and mark ⚠ are critical for safety. Replace only with part number specified.

Note:

The components identified by ⧓ in this manual have been carefully factory-selected for each set in order to satisfy regulations regarding x-ray radiation. Should replacement be required, replace only with the value originally used.

Variant Parts Listing

A

The parts on this page belong to the following model(s) only:

KV-32S66

A-Board Variant Parts List KV-32S66

REF.NO.		PART NO.	DESCRIPTION				REMARK
	*	A-1298-997-A	A COMPLETE PC BOARD				
		CAPACITOR					
C090		1-137-368-11	FILM	0.0047MF	5%	50V	
C360		1-126-956-91	ELECT	0.1MF	20%	50V	
C361		1-126-956-91	ELECT	0.1MF	20%	50V	
C362		1-126-956-91	ELECT	0.1MF	20%	50V	
C370		1-163-037-11	CERAMIC	0.022MF	10%	50V	
C461		1-126-933-11	ELECT	100MF	20%	16V	
C513	⚠	1-130-895-00	FILM	0.056MF	5%	400V	
C514	⚠	1-104-844-11	FILM	0.62MF	5%	200V	
C520		1-164-645-11	CERAMIC	1000PF	10%	500V	
C521		1-164-161-11	CERAMIC	0.0022MF	10%	50V	
C537		1-126-941-11	ELECT	470MF	20%	25V	
C539		1-126-935-11	ELECT	470MF	20%	16V	
C1501		1-115-462-11	FILM	0.12MF	5%	200V	
		CONNECTOR					
CN271		1-573-978-21	CONNECTOR, BOARD TO BOARD 11P				
CN1101		1-573-298-11	CONNECTOR, BOARD TO BOARD 20P				
CN1941	*	1-564-508-11	PLUG, CONNECTOR 5P				
CN3003	*	1-564-596-11	PLUG, CONNECTOR 15P				
		DIODE					
D368		8-719-991-33	DIODE 1SS133T-77				
		CHIP CONDUCTOR					
JR001		1-216-295-91	SHORT				
JR1417		1-216-295-91	SHORT				
		COIL					
L461		1-408-602-31	INDUCTOR	8.2UH			
		TRANSISTOR					
Q018		8-729-422-27	TRANSISTOR 2SD601A-Q				
		RESISTOR					
R006		1-247-815-91	CARBON	220	5%	1/4W	
R008		1-247-815-91	CARBON	220	5%	1/4W	
R012		1-216-033-00	RES,CHIP	220	5%	1/10W	
R031		1-247-815-91	CARBON	220	5%	1/4W	
R040		1-247-815-91	CARBON	220	5%	1/4W	
R041		1-216-065-91	RES,CHIP	4.7K	5%	1/10W	
R042		1-216-065-91	RES,CHIP	4.7K	5%	1/10W	
R044		1-216-033-00	RES,CHIP	220	5%	1/10W	
R045		1-247-815-91	CARBON	220	5%	1/4W	
R074		1-216-025-91	RES,CHIP	100	5%	1/10W	
R075		1-216-025-91	RES,CHIP	100	5%	1/10W	
R090		1-216-033-00	RES,CHIP	220	5%	1/10W	
R102		1-216-089-91	RES,CHIP	47K	5%	1/10W	
R104		1-216-065-91	RES,CHIP	4.7K	5%	1/10W	
R358		1-247-815-91	CARBON	220	5%	1/4W	
R359		1-247-815-91	CARBON	220	5%	1/4W	
R360		1-247-815-91	CARBON	220	5%	1/4W	
R365		1-216-101-00	RES,CHIP	150K	5%	1/10W	
R374		1-216-125-00	RES,CHIP	1.5M	5%	1/10W	
R386		1-216-049-91	RES,CHIP	1K	5%	1/10W	
R466		1-249-388-11	CARBON	3.9	5%	1/4W	F
R469		1-216-055-00	RES,CHIP	1.8K	5%	1/10W	
R472		1-216-055-00	RES,CHIP	1.8K	5%	1/10W	
R511		1-215-885-00	METAL	68	5%	2W	F
R515		1-216-083-00	RES,CHIP	27K	5%	1/10W	
R523		1-216-073-00	RES,CHIP	10K	5%	1/10W	
R529		1-208-814-91	RES,CHIP	22K	0.50%	1/10W	
⧓ R531	⚠	1-208-826-11	RES,CHIP	68K	0.50%	1/10W	
R533		1-215-902-11	METAL	47K	5%	1W	F
R535		1-216-101-00	RES,CHIP	150K	5%	1/10W	
R546		1-215-453-00	METAL	22K	1%	1/4W	
		TRANSFORMER					
T502	⚠	1-424-545-11	TRANSFORMER, FERRITE (PMT)				
T503	⚠	1-453-207-11	FBT ASSY, NX-2609//X4C				

A

Variant Parts Listing

The parts on this page belong to the following model(s) only:

KV-32V42

Note:

The components identified by shading and mark ⚠ are critical for safety. Replace only with part number specified.

Note:

The components identified by ⧓ in this manual have been carefully factory-selected for each set in order to satisfy regulations regarding x-ray radiation. Should replacement be required, replace only with the value originally used.

A-Board Variant Parts List KV-32V42

REF.NO.		PART NO.	DESCRIPTION				REMARK
	*	A-1298-999-A	A COMPLETE PC BOARD				
		CAPACITOR					
C370		1-163-037-11	CERAMIC	0.022µF	10%	50V	
C375		1-164-004-11	CERAMIC	0.1µF	10%	25V	
C461		1-126-964-11	ELECT	10µF	20%	50V	
C513	⚠	1-130-895-00	FILM	0.056µF	5%	400V	
C514	⚠	1-104-844-11	FILM	0.62µF	5%	200V	
C520		1-164-645-11	CERAMIC	1000pF	10%	500V	
C521		1-164-161-11	CERAMIC	0.0022µF	10%	50V	
C537		1-126-941-11	ELECT	470µF	20%	25V	
C539		1-126-935-11	ELECT	470µF	20%	16V	
C1501		1-115-462-11	FILM	0.12µF	5%	200V	
		CONNECTOR					
CN271		1-573-978-21	CONNECTOR, BOARD TO BOARD 11P				
CN1231	*	1-564-511-11	PLUG, CONNECTOR 8P				
CN1941	*	1-564-508-11	PLUG, CONNECTOR 5P				
		CHIP CONDUCTOR					
JR200		1-216-295-91	SHORT				
JR351		1-216-295-91	SHORT				
JR352		1-216-295-91	SHORT				
JR1417		1-216-295-91	SHORT				
		COIL					
L461		1-410-472-41	INDUCTOR	15µH			
L1401		1-410-494-11	INDUCTOR	1µH			
		RESISTOR					
R044		1-216-033-00	RES,CHIP	220	5%	1/10W	
R074		1-216-033-00	RES,CHIP	220	5%	1/10W	
R075		1-216-033-00	RES,CHIP	220	5%	1/10W	
R089		1-216-033-00	RES,CHIP	220	5%	1/10W	
R098	⚠	1-249-385-11	CARBON	2.2	5%	1/4W	F
R365		1-216-101-00	RES,CHIP	150K	5%	1/10W	
R374		1-216-125-00	RES,CHIP	1.5M	5%	1/10W	
R466		1-249-385-11	CARBON	2.2	5%	1/4W	F
R469		1-216-055-00	RES,CHIP	1.8K	5%	1/10W	
R472		1-216-055-00	RES,CHIP	1.8K	5%	1/10W	
R511		1-215-885-00	METAL	68	5%	2W	F
R515		1-216-083-00	RES,CHIP	27K	5%	1/10W	
R523		1-216-073-00	RES,CHIP	10K	5%	1/10W	
R529		1-208-814-91	RES,CHIP	22K	0.50%	1/10W	
⧓ R531	⚠	1-208-826-11	RES,CHIP	68K	0.50%	1/10W	
R533		1-215-902-11	METAL	47K	5%	1W	F
R535		1-216-101-00	RES,CHIP	150K	5%	1/10W	
R546		1-215-453-00	METAL	22K	1%	1/4W	
R1255		1-216-295-91	SHORT				

REF.NO.		PART NO.	DESCRIPTION	REMARK
		TRANSFORMER		
T502	⚠	1-424-545-11	TRANSFORMER, FERRITE (PMT)	
T503	⚠	1-453-207-11	FBT ASSY, NX-2609//X4C	

Note:

The components identified by shading and mark ⚠ are critical for safety. Replace only with part number specified.

Note:

Les composants identifies per un trame et une marque ⚠ sont critiques pour la securite. Ne les remplacer que par une piece portant le numero specifie.

Variant Parts Listing

A

The parts on this page belong to the following model(s) only:
KV-35S42

A-Board Variant Parts List KV-35S42

REF.NO.		PART NO.	DESCRIPTION				REMARK
	*	A-1298-899-A	A COMPLETE PC BOARD				
		CAPACITOR					
C069		1-126-964-11	ELECT	10µF	20%	50V	
C370		1-163-035-00	CERAMIC	0.047µF		50V	
C375		1-165-319-11	CERAMIC	0.1µF		50V	
C461		1-126-933-11	ELECT	100µF	20%	16V	
C513	⚠	1-129-720-00	FILM	0.033µF	5%	630V	
C514	⚠	1-136-540-11	FILM	0.82µF	5%	200V	
C520		1-101-821-00	CERAMIC	0.0022µF		500V	
C521		1-164-182-11	CERAMIC	0.0033µF	10%	50V	
C537		1-126-942-61	ELECT	1000µF	20%	25V	
C539		1-126-942-61	ELECT	1000µF	20%	25V	
C542		1-106-383-00	MYLAR	0.047µF	10%	200V	
C1236		1-163-031-11	CERAMIC	0.01µF		50V	
C1237		1-136-161-00	FILM	0.047µF	5%	50V	
C1238		1-136-161-00	FILM	0.047µF	5%	50V	
C1239		1-126-960-11	ELECT	1µF	20%	50V	
C1240		1-126-960-11	ELECT	1µF	20%	50V	
C1241		1-136-161-00	FILM	0.047µF	5%	50V	
C1242		1-126-960-11	ELECT	1µF	20%	50V	
C1243		1-126-960-11	ELECT	1µF	20%	50V	
C1244		1-126-959-11	ELECT	0.47µF	20%	50V	
C1245		1-126-959-11	ELECT	0.47µF	20%	50V	
C1261		1-104-664-11	ELECT	47µF	20%	16V	
C1262		1-104-664-11	ELECT	47µF	20%	16V	
C1263		1-126-960-11	ELECT	1µF	20%	50V	
C1264		1-126-960-11	ELECT	1µF	20%	50V	
C1267		1-136-161-00	FILM	0.047µF	5%	50V	
C1268		1-126-960-11	ELECT	1µF	20%	50V	
C1269		1-126-960-11	ELECT	1µF	20%	50V	
C1293		1-163-251-11	CERAMIC	100pF	5%	50V	
C1401		1-126-959-11	ELECT	0.47µF	20%	50V	
C1402		1-104-664-11	ELECT	47µF	20%	25V	
C1403		1-126-959-11	ELECT	0.47µF	20%	50V	
C1404		1-126-956-91	ELECT	0.1µF	20%	50V	
C1405		1-163-017-00	CERAMIC	0.0047µF	10%	50V	
C1406		1-126-956-91	ELECT	0.1µF	20%	50V	
C1407		1-163-017-00	CERAMIC	0.0047µF	10%	50V	
C1408		1-126-963-11	ELECT	4.7µF	20%	50V	
C1409		1-126-963-11	ELECT	4.7µF	20%	50V	
C1410		1-126-956-91	ELECT	0.1µF	20%	50V	
C1411		1-165-319-11	CERAMIC	0.1µF		50V	
C1413		1-126-963-11	ELECT	4.7µF	20%	50V	
C1415		1-126-964-11	ELECT	10µF	20%	50V	
C1416		1-126-963-11	ELECT	4.7µF	20%	50V	
C1417		1-126-767-11	ELECT	1000µF	20%	16V	
C1420		1-126-963-11	ELECT	4.7µF	20%	50V	
		CONNECTOR					
CN1941	*	1-564-511-11	PLUG, CONNECTOR 8P				
		DIODE					
D1247		8-719-110-17	DIODE	RD10ESB2			
D1248		8-719-981-99	DIODE	MTZJ-3.3			
D1261		8-719-110-17	DIODE	RD10ESB2			
D1262		8-719-110-17	DIODE	RD10ESB2			
		IC					
IC1261		8-759-366-77	IC MM1311AD				
IC1401		8-752-072-39	IC CXA2021S				
IC1402		8-759-100-96	IC UPC4558G2				
		JACK					
J1232		1-774-751-11	TERMINAL BLOCK, S				
J1233		1-774-749-11	JACK BLOCK, PIN				
J1234		1-774-750-11	JACK BLOCK, PIN				
		CHIP CONDUCTOR					
JR351		1-216-295-91	SHORT				
JR352		1-216-295-91	SHORT				
JR1264		1-216-295-91	SHORT				
JR1450		1-216-295-91	SHORT				
JR1451		1-216-295-91	SHORT				
		COIL					
L461		1-408-602-31	INDUCTOR	8.2µH			
L541		1-406-677-11	INDUCTOR	10µH			
L1401		1-410-494-11	INDUCTOR	1µH			
		TRANSISTOR					
Q1231		8-729-422-27	TRANSISTOR	2SD601A-Q			
Q1232		8-729-422-27	TRANSISTOR	2SD601A-Q			
Q1261		8-729-216-22	TRANSISTOR	2SA1162-G			
Q1262		8-729-216-22	TRANSISTOR	2SA1162-G			
Q1263		8-729-422-27	TRANSISTOR	2SD601A-Q			
		RESISTOR					
R044		1-216-033-00	RES,CHIP	220	5%	1/10W	
R069		1-216-073-00	RES,CHIP	10K	5%	1/10W	
R074		1-216-033-00	RES,CHIP	220	5%	1/10W	
R075		1-216-033-00	RES,CHIP	220	5%	1/10W	
R085		1-216-073-00	RES,CHIP	10K	5%	1/10W	
R098	⚠	1-249-385-11	CARBON	2.2	5%	1/4W	F
R365		1-216-097-91	RES,CHIP	100K	5%	1/10W	
R374		1-216-121-91	RES,CHIP	1M	5%	1/10W	
R466		1-249-388-11	CARBON	3.9	5%	1/4W	F
R469		1-216-065-91	RES,CHIP	4.7K	5%	1/10W	
R472		1-216-065-91	RES,CHIP	4.7K	5%	1/10W	
R511		1-215-886-11	METAL	100	5%	2W	F
R515		1-216-077-91	RES,CHIP	15K	5%	1/10W	
R523		1-216-071-00	RES,CHIP	8.2K	5%	1/10W	

A

Variant Parts Listing

The parts on this page belong to the following model(s) only:

KV-35S42

Note:

The components identified by shading and mark ⚠ are critical for safety. Replace only with part number specified.

Note:

The components identified by ⧓ in this manual have been carefully factory-selected for each set in order to satisfy regulations regarding x-ray radiation. Should replacement be required, replace only with the value originally used.

REF.NO.	PART NO.	DESCRIPTION		REMARK		
R529	1-208-812-11	RES,CHIP	18K	0.50%	1/10W	
⧓ R531 ⚠	1-208-838-91	RES,CHIP	220K	0.50%	1/10W	
R533	1-215-878-00	METAL	33K	5%	1W	F
R535	1-216-103-00	RES,CHIP	180K	5%	1/10W	
R541	1-249-377-11	CARBON	0.47	5%	1/4W	F
R542	1-249-397-11	CARBON	22	5%	1/4W	F
R546	1-215-451-00	METAL	18K	1%	1/4W	
R1234	1-249-441-11	CARBON	100K	5%	1/4W	
R1240	1-216-022-00	RES,CHIP	75	5%	1/10W	
R1241	1-216-022-00	RES,CHIP	75	5%	1/10W	
R1242	1-216-065-91	RES,CHIP	4.7K	5%	1/10W	
R1243	1-249-441-11	CARBON	100K	5%	1/4W	
R1244	1-216-022-00	RES,CHIP	75	5%	1/10W	
R1245	1-216-113-00	RES,CHIP	470K	5%	1/10W	
R1246	1-216-065-91	RES,CHIP	4.7K	5%	1/10W	
R1247	1-216-113-00	RES,CHIP	470K	5%	1/10W	
R1248	1-216-065-91	RES,CHIP	4.7K	5%	1/10W	
R1249	1-216-022-00	RES,CHIP	75	5%	1/10W	
R1250	1-216-113-00	RES,CHIP	470K	5%	1/10W	
R1251	1-216-065-91	RES,CHIP	4.7K	5%	1/10W	
R1252	1-216-113-00	RES,CHIP	470K	5%	1/10W	
R1253	1-216-065-91	RES,CHIP	4.7K	5%	1/10W	
R1254	1-216-113-00	RES,CHIP	470K	5%	1/10W	
R1255	1-216-049-91	RES,CHIP	1K	5%	1/10W	
R1256	1-216-113-00	RES,CHIP	470K	5%	1/10W	
R1257	1-216-049-91	RES,CHIP	1K	5%	1/10W	
R1258	1-216-061-00	RES,CHIP	3.3K	5%	1/10W	
R1259	1-216-097-91	RES,CHIP	100K	5%	1/10W	
R1260	1-216-061-00	RES,CHIP	3.3K	5%	1/10W	
R1261	1-216-033-00	RES,CHIP	220	5%	1/10W	
R1262	1-216-025-91	RES,CHIP	100	5%	1/10W	
R1263	1-216-033-00	RES,CHIP	220	5%	1/10W	
R1264	1-216-025-91	RES,CHIP	100	5%	1/10W	
R1265	1-216-033-00	RES,CHIP	220	5%	1/10W	
R1266	1-216-025-91	RES,CHIP	100	5%	1/10W	
R1267	1-216-295-91	SHORT				
R1268	1-216-025-91	RES,CHIP	100	5%	1/10W	
R1270	1-216-025-91	RES,CHIP	100	5%	1/10W	
R1273	1-216-033-00	RES,CHIP	220	5%	1/10W	
R1274	1-216-025-91	RES,CHIP	100	5%	1/10W	
R1277	1-247-815-91	CARBON	220	5%	1/4W	
R1278	1-247-815-91	CARBON	220	5%	1/4W	
R1280	1-216-025-91	RES,CHIP	100	5%	1/10W	
R1282	1-216-025-91	RES,CHIP	100	5%	1/10W	
R1283	1-247-791-91	CARBON	22	5%	1/4W	
R1284	1-247-807-31	CARBON	100	5%	1/4W	
R1286	1-216-049-91	RES,CHIP	1K	5%	1/10W	
R1287	1-216-049-91	RES,CHIP	1K	5%	1/10W	
R1288	1-247-807-31	CARBON	100	5%	1/4W	
R1290	1-216-041-00	RES,CHIP	470	5%	1/10W	
R1291	1-216-045-00	RES,CHIP	680	5%	1/10W	
R1292	1-216-065-91	RES,CHIP	4.7K	5%	1/10W	
R1293	1-216-065-91	RES,CHIP	4.7K	5%	1/10W	
R1294	1-216-049-91	RES,CHIP	1K	5%	1/10W	
R1295	1-216-049-91	RES,CHIP	1K	5%	1/10W	
R1296	1-216-025-91	RES,CHIP	100	5%	1/10W	
R1407	1-216-073-00	RES,CHIP	10K	5%	1/10W	
R1410	1-216-121-91	RES,CHIP	1M	5%	1/10W	
R1411	1-216-073-00	RES,CHIP	10K	5%	1/10W	
R1412	1-216-081-00	RES,CHIP	22K	5%	1/10W	
R1413	1-216-089-91	RES,CHIP	47K	5%	1/10W	
R1414	1-216-089-91	RES,CHIP	47K	5%	1/10W	
R1415	1-216-025-91	RES,CHIP	100	5%	1/10W	
R1418	1-216-081-00	RES,CHIP	22K	5%	1/10W	
R1419	1-216-089-91	RES,CHIP	47K	5%	1/10W	
R1420	1-216-089-91	RES,CHIP	47K	5%	1/10W	
R1421	1-216-025-91	RES,CHIP	100	5%	1/10W	
R1424	1-247-815-91	CARBON	220	5%	1/4W	
R1425	1-247-815-91	CARBON	220	5%	1/4W	

TRANSFORMER

REF.NO.	PART NO.	DESCRIPTION
T502 ⚠	1-429-408-11	TRANSFORMER, FERRITE (PMT)
T503 ⚠	X-4560-159-1	FBT ASSY, NX-3005//JIC4
T504	1-413-059-00	TRANSFORMER, FERRITE (DFT)

Note:

The components identified by shading and mark ⚠ are critical for safety. Replace only with part number specified.

Note:

The components identified by [x-ray mark] in this manual have been carefully factory-selected for each set in order to satisfy regulations regarding x-ray radiation. Should replacement be required, replace only with the value originally used.

Variant Parts Listing

A

The parts on this page belong to the following model(s) only:

KV-35S66

A-Board Variant Parts List KV-35S66

REF.NO.		PART NO.	DESCRIPTION			REMARK	
	*	A-1298-897-A	A COMPLETE PC BOARD				
		CAPACITOR					
C069		1-126-964-11	ELECT	10µH	20%	50V	
C090		1-137-368-11	FILM	0.0047µH	5%	50V	
C360		1-126-956-91	ELECT	0.1µH	20%	50V	
C361		1-126-956-91	ELECT	0.1µH	20%	50V	
C362		1-126-956-91	ELECT	0.1µH	20%	50V	
C370		1-163-035-00	CERAMIC	0.047µH		50V	
C461		1-126-933-11	ELECT	100µH	20%	16V	
C513	⚠	1-129-720-00	FILM	0.033µH	5%	630V	
C514	⚠	1-136-540-11	FILM	0.82µH	5%	200V	
C520		1-101-821-00	CERAMIC	0.0022µH		500V	
C521		1-164-182-11	CERAMIC	0.0033µH	10%	50V	
C537		1-126-942-61	ELECT	1000µH	20%	25V	
C539		1-126-942-61	ELECT	1000µH	20%	25V	
C542		1-106-383-00	MYLAR	0.047µH	10%	200V	
		CONNECTOR					
CN271		1-573-978-21	CONNECTOR, BOARD TO BOARD 11P				
CN1101		1-573-298-11	CONNECTOR, BOARD TO BOARD 20P				
CN1941	*	1-564-511-11	PLUG, CONNECTOR 8P				
CN3003	*	1-691-616-11	CONNECTOR, BOARD TO BOARD 15P				
		DIODE					
D368		8-719-991-33	DIODE 1SS133T-77				
		CHIP CONDUCTOR					
JR001		1-216-295-91	SHORT				
JR1417		1-216-295-91	SHORT				
		COIL					
L461		1-408-602-31	INDUCTOR	8.2µH			
L541		1-406-677-11	INDUCTOR	10µH			
		TRANSISTOR					
Q018		8-729-422-27	TRANSISTOR 2SD601A-Q				
		RESISTOR					
R006		1-247-815-91	CARBON	220	5%	1/4W	
R008		1-247-815-91	CARBON	220	5%	1/4W	
R012		1-216-033-00	RES,CHIP	220	5%	1/10W	
R031		1-247-815-91	CARBON	220	5%	1/4W	
R040		1-247-815-91	CARBON	220	5%	1/4W	
R041		1-216-065-91	RES,CHIP	4.7K	5%	1/10W	
R042		1-216-065-91	RES,CHIP	4.7K	5%	1/10W	
R044		1-216-033-00	RES,CHIP	220	5%	1/10W	
R045		1-247-815-91	CARBON	220	5%	1/4W	
R069		1-216-073-00	RES,CHIP	10K	5%	1/10W	
R074		1-216-025-91	RES,CHIP	100	5%	1/10W	
R075		1-216-025-91	RES,CHIP	100	5%	1/10W	
R085		1-216-073-00	RES,CHIP	10K	5%	1/10W	
R090		1-216-033-00	RES,CHIP	220	5%	1/10W	
R102		1-216-089-91	RES,CHIP	47K	5%	1/10W	
R104		1-216-065-91	RES,CHIP	4.7K	5%	1/10W	
R358		1-247-815-91	CARBON	220	5%	1/4W	
R359		1-247-815-91	CARBON	220	5%	1/4W	
R360		1-247-815-91	CARBON	220	5%	1/4W	
R365		1-216-097-91	RES,CHIP	100K	5%	1/10W	
R374		1-216-121-91	RES,CHIP	1M	5%	1/10W	
R386		1-216-049-91	RES,CHIP	1K	5%	1/10W	
R466		1-249-388-11	CARBON	3.9	5%	1/4W	F
R469		1-216-055-00	RES,CHIP	1.8K	5%	1/10W	
R472		1-216-055-00	RES,CHIP	1.8K	5%	1/10W	
R511		1-215-886-11	METAL	100	5%	2W	F
R515		1-216-077-91	RES,CHIP	15K	5%	1/10W	
R523		1-216-071-00	RES,CHIP	8.2K	5%	1/10W	
R529		1-208-812-11	RES,CHIP	18K	0.50%	1/10W	
[x-ray mark] R531	⚠	1-208-838-91	RES,CHIP	220K	0.50%	1/10W	
R533		1-215-878-00	METAL	33K	5%	1W	F
R535		1-216-103-00	RES,CHIP	180K	5%	1/10W	
R541		1-249-377-11	CARBON	0.47	5%	1/4W	F
R542		1-249-397-11	CARBON	22	5%	1/4W	F
R546		1-215-451-00	METAL	18K	1%	1/4W	
		TRANSFORMER					
T502	⚠	1-429-408-11	TRANSFORMER, FERRITE (PMT)				
T503	⚠	X-4560-159-1	FBT ASSY, NX-3005//JIC4				
T504		1-413-059-00	TRANSFORMER, FERRITE (DFT)				

A

Variant Parts Listing

The parts on this page belong to the following model(s) only:

KV-35V42

Note:

The components identified by shading and mark ⚠ are critical for safety. Replace only with part number specified.

Note:

The components identified by ⧓ in this manual have been carefully factory-selected for each set in order to satisfy regulations regarding x-ray radiation. Should replacement be required, replace only with the value originally used.

A-Board Variant Parts List KV-35V42

REF.NO.		PART NO.	DESCRIPTION				REMARK
*		A-1298-898-A	A COMPLETE PC BOARD				
		CAPACITOR					
C069		1-126-964-11	ELECT	10µF	20%	50V	
C076		1-126-960-11	ELECT	1µF	20%	50V	
C077		1-126-960-11	ELECT	1µF	20%	50V	
C370		1-163-035-00	CERAMIC	0.047µF		50V	
C375		1-165-319-11	CERAMIC	0.1µF		50V	
C461		1-126-933-11	ELECT	100µF	20%	16V	
C513	⚠	1-129-720-00	FILM	0.033µF	5%	630V	
C514	⚠	1-136-540-11	FILM	0.82µF	5%	200V	
C520		1-101-821-00	CERAMIC	0.0022µF		500V	
C521		1-164-182-11	CERAMIC	0.0033µF	10%	50V	
C537		1-126-942-61	ELECT	1000µF	20%	25V	
C539		1-126-942-61	ELECT	1000µF	20%	25V	
C542		1-106-383-00	MYLAR	0.047µF	10%	200V	
		CONNECTOR					
CN271		1-573-978-21	CONNECTOR, BOARD TO BOARD 11P				
CN1231	*	1-564-511-11	PLUG, CONNECTOR 8P				
CN1941	*	1-564-511-11	PLUG, CONNECTOR 8P				
		DIODE					
D1247		8-719-110-17	DIODE	RD10ESB2			
D1261		8-719-110-17	DIODE	RD10ESB2			
D1262		8-719-110-17	DIODE	RD10ESB2			
		JACK					
J1234		1-774-750-11	JACK BLOCK, PIN				
		CHIP CONDUCTOR					
JR200		1-216-295-91	SHORT				
JR351		1-216-295-91	SHORT				
JR352		1-216-295-91	SHORT				
JR1264		1-216-295-91	SHORT				
JR1417		1-216-295-91	SHORT				
		COIL					
L461		1-410-472-41	INDUCTOR	15µH			
L541		1-406-677-11	INDUCTOR	10µH			
L1401		1-410-494-11	INDUCTOR	1µH			
		TRANSISTOR					
Q1231		8-729-120-28	TRANSISTOR 2SC1623-L5L6				
Q1232		8-729-120-28	TRANSISTOR 2SC1623-L5L6				
Q1261		8-729-026-49	TRANSISTOR 2SA1037AK-T146-R				
Q1262		8-729-026-49	TRANSISTOR 2SA1037AK-T146-R				
Q1263		8-729-120-28	TRANSISTOR 2SC1623-L5L6				
		RESISTOR					
R044		1-216-049-91	RES,CHIP	1K	5%	1/10W	
R069		1-216-073-00	RES,CHIP	10K	5%	1/10W	
R074		1-216-033-00	RES,CHIP	220	5%	1/10W	
R075		1-216-033-00	RES,CHIP	220	5%	1/10W	
R085		1-216-073-00	RES,CHIP	10K	5%	1/10W	
R089		1-216-033-00	RES,CHIP	220	5%	1/10W	
R098	⚠	1-249-385-11	CARBON	2.2	5%	1/4W	F
R365		1-216-097-91	RES,CHIP	100K	5%	1/10W	
R374		1-216-121-91	RES,CHIP	1M	5%	1/10W	
R466		1-249-388-11	CARBON	3.9	5%	1/4W	F
R469		1-216-055-00	RES,CHIP	1.8K	5%	1/10W	
R472		1-216-065-91	RES,CHIP	4.7K	5%	1/10W	
R511		1-215-886-11	METAL	100	5%	2W	F
R515		1-216-077-91	RES,CHIP	15K	5%	1/10W	
R523		1-216-071-00	RES,CHIP	8.2K	5%	1/10W	
R529		1-208-812-11	RES,CHIP	18K	0.50%	1/10W	
⧓ R531	⚠	1-208-838-91	RES,CHIP	220K	0.50%	1/10W	
R533		1-215-878-00	METAL	33K	5%	1W	F
R535		1-216-103-00	RES,CHIP	180K	5%	1/10W	
R541		1-249-377-11	CARBON	0.47	5%	1/4W	F
R542		1-249-397-11	CARBON	22	5%	1/4W	F
R546		1-215-451-00	METAL	18K	1%	1/4W	
R1255		1-216-295-91	SHORT				
		TRANSFORMER					
T502	⚠	1-429-408-11	TRANSFORMER, FERRITE (PMT)				
T503	⚠	X-4560-159-1	FBT ASSY, NX-3005//JIC4				
T504		1-413-059-00	TRANSFORMER, FERRITE (DFT)				

Note:

The components identified by shading and mark ⚠ are critical for safety. Replace only with part number specified.

Note:

Les composants identifies per un trame et une marque ⚠ sont critiques pour la securite. Ne les remplacer que par une piece portant le numero specifie.

AV B

Complete Parts Listing

AV

REF.NO.	PART NO.	DESCRIPTION				REMARK
*	A-1298-612-A	AV COMPLETE PC BOARD (KV-32S66/35S66 ONLY)				
	CAPACITOR					
C101	1-126-960-11	ELECT	1µF	20%	50V	
C102	1-164-161-11	CERAMIC	0.0022µF	10%	50V	
C104	1-126-964-11	ELECT	10µF	20%	50V	
C106	1-104-664-11	ELECT	47µF	20%	25V	
C108	1-126-933-11	ELECT	100µF	20%	16V	
C109	1-163-259-91	CERAMIC	220pF	5%	50V	
C110	1-104-760-11	CERAMIC	0.047µF	10%	50V	
C111	1-126-960-11	ELECT	1µF	20%	50V	
C113	1-126-934-11	ELECT	220µF	20%	16V	
C1904	1-102-129-00	CERAMIC	0.01µF	10%	50V	
C1905	1-126-964-11	ELECT	10µF	20%	50V	
C1906	1-102-129-00	CERAMIC	0.01µF	10%	50V	
C1907	1-126-964-11	ELECT	10µF	20%	50V	
C1908	1-163-009-11	CERAMIC	0.001µF	10%	50V	
C1909	1-163-009-11	CERAMIC	0.001µF	10%	50V	
	CONNECTOR					
CN101	1-573-301-21	CONNECTOR,BOARD 20P				
CN102	1-573-979-21	CONNECTOR,BOARD 11P				
CN103	1-564-507-11	PLUG,CONNECTOR 4P				
CN106	1-564-506-11	PLUG,CONNECTOR 3P				
	DIODE					
D101	8-719-109-89	DIODE RD5.6ESB2				
D103	8-719-991-33	DIODE 1SS133T-77				
D104	8-719-991-33	DIODE 1SS133T-77				
D105	8-719-991-33	DIODE 1SS133T-77				
D106	8-719-991-33	DIODE 1SS133T-77				
	IC					
IC1901	8-752-058-68	IC CXA1315M-T4				
IC1902	8-759-470-63	IC NJM2145M-TE2				
	CHIP CONDUCTOR					
JR102	1-216-295-91	SHORT				
JR103	1-216-295-91	SHORT				
	COIL					
L102	1-410-470-11	INDUCTOR	10µH			
L105	1-408-421-00	INDUCTOR	100µH			
	TRANSISTOR					
Q101	8-729-119-78	TRANSISTOR 2SC2785-HFE				
Q103	8-729-216-22	TRANSISTOR 2SA1162-G				
Q104	8-729-216-22	TRANSISTOR 2SA1162-G				
Q105	8-729-216-22	TRANSISTOR 2SA1162-G				
Q106	8-729-422-27	TRANSISTOR 2SD601A-Q				
Q1901	8-729-216-22	TRANSISTOR 2SA1162-G				
Q1902	8-729-216-22	TRANSISTOR 2SA1162-G				

REF.NO.	PART NO.	DESCRIPTION				REMARK
	RESISTOR					
R101	⚠ 1-216-065-91	RES,CHIP	4.7K	5%	1/10W	
R102	1-216-083-00	RES,CHIP	27K	5%	1/10W	
R103	1-216-689-11	RES,CHIP	39K	5%	1/10W	
R104	1-216-045-00	RES,CHIP	680	5%	1/10W	
R106	1-216-081-00	RES,CHIP	22K	5%	1/10W	
R107	1-216-081-00	RES,CHIP	22K	5%	1/10W	
R108	1-216-081-00	RES,CHIP	22K	5%	1/10W	
R109	1-216-081-00	RES,CHIP	22K	5%	1/10W	
R112	1-216-057-00	RES,CHIP	2.2K	5%	1/10W	
R113	1-216-097-91	RES,CHIP	100K	5%	1/10W	
R114	1-216-121-91	RES,CHIP	1M	5%	1/10W	
R115	1-216-073-00	RES,CHIP	10K	5%	1/10W	
R116	1-216-073-00	RES,CHIP	10K	5%	1/10W	
R117	1-216-065-91	RES,CHIP	4.7K	5%	1/10W	
R118	1-216-295-91	SHORT				
R121	1-216-049-91	RES,CHIP	1K	5%	1/10W	
R125	1-216-043-91	RES,CHIP	560	5%	1/10W	
R126	1-216-045-00	RES,CHIP	680	5%	1/10W	
R1904	1-216-073-00	RES,CHIP	10K	5%	1/10W	
R1905	1-216-073-00	RES,CHIP	10K	5%	1/10W	
R2904	1-216-033-00	RES,CHIP	220	5%	1/10W	
R2905	1-216-033-00	RES,CHIP	220	5%	1/10W	
R2909	1-216-073-00	RES,CHIP	10K	5%	1/10W	
R2910	1-216-073-00	RES,CHIP	10K	5%	1/10W	
R2912	1-216-073-00	RES,CHIP	10K	5%	1/10W	
R2913	1-216-073-00	RES,CHIP	10K	5%	1/10W	
R2914	1-216-073-00	RES,CHIP	10K	5%	1/10W	
	TUNER					
TU101	⚠ 8-598-430-00	TUNER, FSS BTF-FA401				

B

REF.NO.	PART NO.	DESCRIPTION				REMARK
*	A-1135-949-A	B, COMPLETE PC BOARD (KV-32S66/35S66)				
*	A-1135-948-A	B, COMPLETE PC BOARD (KV-32V42/35V42)				
*	A-1135-950-A	B, COMPLETE PC BOARD (KV-32S42/35S42)				
	CAPACITOR					
C3501	1-104-664-11	ELECT	47µF	20%	25V	
C3502	1-163-231-11	CERAMIC	15pF	5%	50V	
C3503	1-163-021-91	CERAMIC	0.01µF	10%	50V	
C3504	1-126-964-11	ELECT	10µF	20%	50V	
C3505	1-163-131-00	CERAMIC	390pF	5%	50V	
C3506	1-163-021-91	CERAMIC	0.01µF	10%	50V	
C3507	1-126-963-11	ELECT	4.7µF	20%	50V	
C3508	1-163-021-91	CERAMIC	0.01µF	10%	50V	
C3509	1-126-961-11	ELECT	2.2µF	20%	50V	
C3510	1-163-229-11	CERAMIC	12pF	5%	50V	
C3511	1-126-960-11	ELECT	1µF	20%	50V	
C3512	1-163-133-00	CERAMIC	470pF	5%	50V	
C3513	1-163-131-00	CERAMIC	390pF	5%	50V	

B

Complete Parts Listing

Note:

The components identified by shading and mark ⚠ are critical for safety. Replace only with part number specified.

Note:

Les composants identifies per un trame et une marque ⚠ sont critiques pour la securite. Ne les remplacer que par une piece portant le numero specifie.

REF.NO.	PART NO.	DESCRIPTION		REMARK	
C3514	1-163-009-11	CERAMIC	0.001µF	10%	50V
C3515	1-126-963-11	ELECT	4.7µF	20%	50V
C3516	1-163-089-00	CERAMIC	6pF	0.50%	50V
C3517	1-163-021-91	CERAMIC	0.01µF	10%	50V
C3518	1-126-941-11	ELECT	470µF	20%	25V
C3519	1-163-021-91	CERAMIC	0.01µF	10%	50V
C3520	1-163-133-00	CERAMIC	470pF	5%	50V
C3521	1-104-664-11	ELECT	47µF	20%	25V
C3522	1-126-964-11	ELECT	10µF	20%	50V
C3523	1-163-021-91	CERAMIC	0.01µF	10%	50V
C3524	1-104-664-11	ELECT	47µF	20%	25V
C3525	1-163-021-91	CERAMIC	0.01µF	10%	50V
C3526	1-163-038-91	CERAMIC	0.1µF		25V
C3527	1-163-038-91	CERAMIC	0.1µF		25V
C3528	1-164-222-11	CERAMIC	0.22µF		25V
C3529	1-163-038-91	CERAMIC	0.1µF		25V
C3532	1-164-004-11	CERAMIC	0.1µF	10%	25V
C3533	1-163-021-91	CERAMIC	0.01µF	10%	50V
C3534	1-163-021-91	CERAMIC	0.01µF	10%	50V
C3535	1-104-664-11	ELECT	47µF	20%	25V
C3536	1-126-964-11	ELECT	10µF	20%	50V
C3537	1-163-231-11	CERAMIC	15pF	5%	50V
C3538	1-163-021-91	CERAMIC	0.01µF	10%	50V
C3539	1-163-021-91	CERAMIC	0.01µF	10%	50V
C3540	1-163-231-11	CERAMIC	15pF	5%	50V
C3541	1-104-664-11	ELECT	47µF	20%	25V
C3542	1-163-021-91	CERAMIC	0.01µF	10%	50V
C3543	1-104-664-11	ELECT	47µF	20%	25V
C3544	1-104-664-11	ELECT	47µF	20%	25V
C3545	1-164-004-11	CERAMIC	0.1µF	10%	25V
C3548	1-164-004-11	CERAMIC	0.1µF	10%	25V
C3549	1-126-964-11	ELECT	10µF	20%	50V
C3550	1-104-664-11	ELECT	47µF	20%	25V
C3551	1-163-021-91	CERAMIC	0.01µF	10%	50V
C3553	1-126-941-11	ELECT	470µF	20%	25V
C3556	1-128-551-11	ELECT	22µF	20%	25V
C3558	1-126-956-91	ELECT	0.1µF	20%	50V

CONNECTOR

CN3502	1-573-978-21	CONNECTOR,BOARD TO BOARD 11P (KV-32S66/35S66 ONLY)
CN3561 *	1-691-616-21	CONNECTOR,BOARD TO BOARD 15P (KV-32V42/S66/35V42/S66 ONLY)
CN3570	1-573-301-21	CONNECTOR,BOARD TO BOARD 20P (KV-32S42/35S42 ONLY)

FILTER

FL3501	1-239-847-11	FILTER,LOW PASS
FL3502	1-239-847-11	FILTER,LOW PASS
FL3503	1-239-847-11	FILTER,LOW PASS

IC

IC3501	8-759-065-82	IC MM1093ND
IC3502	8-752-385-80	IC CXD2073S
IC3503	8-759-231-53	IC L7805CV

COIL

L3501	1-410-470-11	INDUCTOR	10µH
L3502	1-410-466-41	INDUCTOR	4.7µH
L3503	1-410-470-11	INDUCTOR	10µH
L3504	1-410-470-11	INDUCTOR	10µH
L3505	1-410-470-11	INDUCTOR	10µH

TRANSISTOR

Q3501	8-729-422-27	TRANSISTOR	2SD601A-Q
Q3502	8-729-216-22	TRANSISTOR	2SA1162-G
Q3503	8-729-422-27	TRANSISTOR	2SD601A-Q
Q3504	8-729-216-22	TRANSISTOR	2SA1162-G
Q3505	8-729-422-27	TRANSISTOR	2SD601A-Q
Q3506	8-729-216-22	TRANSISTOR	2SA1162-G
Q3507	8-729-216-22	TRANSISTOR	2SA1162-G
Q3509	8-729-216-22	TRANSISTOR	2SA1162-G
Q3510	8-729-422-27	TRANSISTOR	2SD601A-Q
Q3516	8-729-216-22	TRANSISTOR	2SA1162-G
Q3555	8-729-216-22	TRANSISTOR	2SA1162-G

RESISTOR

R3501	1-216-091-00	RES,CHIP	56K	5%	1/10W
R3502	1-216-081-00	RES,CHIP	22K	5%	1/10W
R3503	1-216-009-91	RES,CHIP	22	5%	1/10W
R3504	1-216-029-00	RES,CHIP	150	5%	1/10W
R3505	1-216-037-00	RES,CHIP	330	5%	1/10W
R3506	1-216-035-00	RES,CHIP	270	5%	1/10W
R3507	1-216-057-00	RES,CHIP	2.2K	5%	1/10W
R3508	1-216-043-91	RES,CHIP	560	5%	1/10W
R3509	1-216-075-00	RES,CHIP	12K	5%	1/10W
R3510	1-216-049-91	RES,CHIP	1K	5%	1/10W
R3511	1-216-065-91	RES,CHIP	4.7K	5%	1/10W
R3512	1-216-065-91	RES,CHIP	4.7K	5%	1/10W
R3513	1-216-041-00	RES,CHIP	470	5%	1/10W
R3514	1-216-121-91	RES,CHIP	1M	5%	1/10W
R3515	1-216-077-91	RES,CHIP	15K	5%	1/10W
R3516	1-216-037-00	RES,CHIP	330	5%	1/10W
R3517	1-216-077-91	RES,CHIP	15K	5%	1/10W
R3518	1-216-067-00	RES,CHIP	5.6K	5%	1/10W
R3520	1-208-766-11	RES,CHIP	220	0.50%	1/10W
R3521	1-208-766-11	RES,CHIP	220	0.50%	1/10W
R3522	1-208-774-11	RES,CHIP	470	0.50%	1/10W
R3523	1-208-778-11	RES,CHIP	680	0.50%	1/10W
R3524	1-208-794-11	RES,CHIP	3.3K	0.50%	1/10W
R3529	1-216-295-91	SHORT			
R3531	1-216-295-91	SHORT			
R3534	1-216-295-91	SHORT			
R3535	1-216-295-91	SHORT			
R3536	1-216-057-00	RES,CHIP	2.2K	5%	1/10W
R3537	1-216-043-91	RES,CHIP	560	5%	1/10W
R3538	1-216-071-00	RES,CHIP	8.2K	5%	1/10W
R3539	1-216-089-91	RES,CHIP	47K	5%	1/10W
R3540	1-216-049-91	RES,CHIP	1K	5%	1/10W

Note:

The components identified by shading and mark ⚠ are critical for safety. Replace only with part number specified.

Note:

Les composants identifies per un trame et une marque ⚠ sont critiques pour la securite. Ne les remplacer que par une piece portant le numero specifie.

B C G

Complete Parts Listing

REF.NO.	PART NO.	DESCRIPTION		REMARK	
R3541	1-216-081-00	RES,CHIP	22K	5%	1/10W
R3542	1-216-041-00	RES,CHIP	470	5%	1/10W
R3543	1-216-035-00	RES,CHIP	270	5%	1/10W
R3544	1-216-057-00	RES,CHIP	2.2K	5%	1/10W
R3545	1-216-043-91	RES,CHIP	560	5%	1/10W
R3546	1-216-071-00	RES,CHIP	8.2K	5%	1/10W
R3547	1-216-089-91	RES,CHIP	47K	5%	1/10W
R3548	1-216-081-00	RES,CHIP	22K	5%	1/10W
R3549	1-216-049-91	RES,CHIP	1K	5%	1/10W
R3550	1-208-774-11	RES,CHIP	470	0.50%	1/10W
R3551	1-208-764-11	RES,CHIP	180	0.50%	1/10W
R3558	1-216-049-91	RES,CHIP	1K	5%	1/10W
R3565	1-216-295-91	SHORT			
R3566	1-216-025-91	RES,CHIP	100	5%	1/10W
R3568	1-216-025-91	RES,CHIP	100	5%	1/10W
R3569	1-216-041-00	RES,CHIP	470	5%	1/10W
R3578	1-216-081-00	RES,CHIP	22K	5%	1/10W
R3579	1-216-081-00	RES,CHIP	22K	5%	1/10W
R3580	1-216-295-91	SHORT			
R3596	1-216-057-00	RES,CHIP	2.2K	5%	1/10W
R3597	1-216-057-00	RES,CHIP	2.2K	5%	1/10W
R3599	1-208-774-11	RES,CHIP	470	0.50%	1/10W

CRYSTAL

X3501	1-567-505-11	OSCILLATOR,CRYSTAL

C

*	**A-1331-843-A**	**C BOARD, COMPLETE (KV-35S42/3566/35V42)**
*	**A-1331-837-A**	**C BOARD, COMPLETE (KV-32S42/32S66/32V42)**
	4-382-854-11	SCREW (M3X10), P, SW (+)

CAPACITOR

C1750	1-137-528-11	FILM	0.1µF	10%	250V
C1751	1-107-655-11	ELECT	47µF	20%	250V
C1790	1-102-129-00	CERAMIC	0.01µF	10%	50V
C1791	1-126-968-11	ELECT	100µF	20%	50V
C1792	1-102-106-00	CERAMIC	100pF	10%	50V
C1794	1-107-651-11	ELECT (KV-35S42/S66/V42 ONLY)	4.7µF	20%	250V
C1795	1-102-074-00	CERAMIC	0.001µF	10%	50V
C1799	1-162-114-00	CERAMIC	0.0047µF		2KV

CONNECTOR

CN1761 *	1-564-509-11	PLUG, CONNECTOR 6P
CN1764 *	1-564-508-11	PLUG, CONNECTOR 5P
CN1766	1-695-915-11	TAB (CONTACT)

DIODE

D1790	8-719-991-33	DIODE 1SS133T-77
D1791	8-719-908-03	DIODE GP08D
D1792	8-719-908-03	DIODE GP08D (KV-35S42/S66/V42 ONLY)
D1793	8-719-908-03	DIODE GP08D
D1794	8-719-908-03	DIODE GP08D

IC

IC1701 ⚠	8-759-562-43	IC TDA6108JF/N1B

JACK

J1761 ⚠	1-251-388-11	SOCKET, CRT

COIL

L1790	1-412-537-31	INDUCTOR	100µH

TRANSISTOR

Q1790	8-729-119-76	TRANSISTOR 2SA1175-HFE

RESISTOR

R1750	1-247-870-11	CARBON	43K	5%	1/4W	
R1763	1-260-099-11	CARBON	1K	5%	1/2W	
R1764	1-247-807-31	CARBON	100	5%	1/4W	
R1773	1-260-099-11	CARBON	1K	5%	1/2W	
R1774	1-247-807-31	CARBON	100	5%	1/4W	
R1783	1-260-099-11	CARBON	1K	5%	1/2W	
R1784	1-247-807-31	CARBON	100	5%	1/4W	
R1788	1-216-349-00	METAL	1	5%	1W	F
R1789	1-249-437-11	CARBON	47K	5%	1/4W	
R1790	1-216-369-00	METAL (KV-35S42/S66/V42 ONLY)	1	5%	2W	F
R1790	1-216-378-11	METAL (KV-32S42/S66/V42 ONLY)	5.6	5%	2W	F
R1792	1-247-815-91	CARBON	220	5%	1/4W	
R1793	1-247-866-11	CARBON	30K	5%	1/4W	
R1794	1-260-132-11	CARBON (KV-35S42/S66/V42 ONLY)	560K	5%	1/2W	
R1795	1-260-087-11	CARBON	100	5%	1/2W	
R1796	1-216-369-00	METAL (KV-35S42/S66/V42 ONLY)	1	5%	2W	F
R1796	1-216-378-11	METAL (KV-32S42/S66/V42 ONLY)	5.6	5%	2W	F
R1797	1-260-123-11	CARBON	100K	5%	1/2W	

G

*	**A-1316-399-A**	**G BOARD, COMPLETE (KV-35S42/35S66/35V42)**
*	**A-1316-389-A**	**G BOARD, COMPLETE (KV-32S42/32S66/32V42)**
	1-533-223-11	HOLDER,FUSE
	4-382-854-11	SCREW(M3X10),P,SW(+)

CAPACITOR

C601	1-136-346-21	FILM (KV-35S42/S66/V42 ONLY)	0.22µF	20%	125V
C602	1-126-964-11	ELECT	10µF	20%	50V
C603 ⚠	1-113-903-11	CERAMIC	0.001µF	20%	250V
C604 ⚠	1-136-346-21	FILM	0.22µF	20%	125V
C605 ⚠	1-136-346-21	FILM	0.22µF	20%	125V
C606 ⚠	1-117-894-11	ELECT	560µF	20%	250V
C607 ⚠	1-117-894-11	ELECT	560µF	20%	250V
C608	1-165-127-11	CERAMIC	470pF	10%	500V

G

Complete Parts Listing

Note:

The components identified by shading and mark ⚠ are critical for safety. Replace only with part number specified.

Note:

Les composants identifies per un trame et une marque ⚠ sont critiques pour la securite. Ne les remplacer que par une piece portant le numero specifie.

REF.NO.		PART NO.	DESCRIPTION		REMARK	
C609		1-136-175-00	FILM	0.68µF	5%	50V
C610		1-136-175-00	FILM	0.68µF	5%	50V
C611		1-136-169-00	FILM	0.22µF	5%	50V
C612		1-136-169-00	FILM	0.22µF	5%	50V
C613		1-164-646-11	CERAMIC	2200pF	10%	500V
C615		1-129-722-00	FILM	0.047µF	5%	630V
C616	⚠	1-113-903-11	CERAMIC	0.001µF	20%	250V
C624		1-126-961-11	ELECT	2.2µF	20%	50V
C628		1-119-907-51	CERAMIC	4700pF	20%	250V
C629		1-107-680-91	ELECT	22µF	20%	450V
C630		1-130-471-00	MYLAR	0.001µF	5%	50V
C631		1-137-605-11	FILM	0.01µF	10%	250V
C633		1-130-471-00	MYLAR	0.001µF	5%	50V
C634		1-130-467-00	MYLAR	470pF	5%	50V
C635		1-130-471-00	MYLAR	0.001µF	5%	50V
C636		1-126-965-11	ELECT	22µF	20%	50V
C637		1-126-940-11	ELECT	330µF	20%	25V
C640		1-119-907-51	CERAMIC	4700pF	20%	250V
C641		1-128-550-11	ELECT	2200µF	20%	50V
C643		1-107-641-11	ELECT	220µF	20%	160V
C647		1-104-665-11	ELECT	100µF	20%	25V
C650		1-104-664-11	ELECT	47µF	20%	25V
C651		1-137-366-11	FILM	0.0022µF	5%	50V
C652		1-106-351-00	MYLAR	0.0022µF	20%	200V
C653		1-107-636-11	ELECT	10µF	20%	160V
C654		1-164-625-11	CERAMIC	680pF	10%	500V
C655		1-164-625-11	CERAMIC	680pF	10%	500V
C656		1-164-625-11	CERAMIC	680pF	10%	500V
C657		1-164-625-11	CERAMIC	680pF	10%	500V
C660		1-126-767-11	ELECT	1000µF	20%	16V
C690		1-164-645-11	CERAMIC	1000pF	10%	500V
C691		1-164-645-11	CERAMIC	1000pF	10%	500V

CONNECTOR

REF.NO.	PART NO.	DESCRIPTION
CN601	1-573-963-11	PIN,CONNECTOR(PC BOARD) 3P (KV-35S42/S66/V42 ONLY)
CN602	1-580-844-11	PIN,CONNECTOR(POWER)
CN603	1-573-963-11	PIN, CONNECTOR(PC BOARD) 3P (KV-35S42/S66/V42 ONLY)
CN604	1-508-765-00	PIN, CONNECTOR (5MM PITCH) 3P (KV-32S42/S66/V42 ONLY)
CN641	1-564-515-11	PLUG,CONNECTOR 12P
CN643	1-508-784-00	PIN,CONNECTOR(5MM PITCH) 1P

DIODE

REF.NO.		PART NO.	DESCRIPTION	
D600		8-719-991-33	DIODE	1SS133T-77
D601		8-719-991-33	DIODE	1SS133T-77
D602	⚠	8-719-510-53	DIODE	D4SB60L
D603		8-719-052-90	DIODE	D1NL40-TA2
D604		8-719-052-90	DIODE	D1NL40-TA2
D612		8-719-991-33	DIODE	1SS133T-77
D613		8-719-991-33	DIODE	1SS133T-77
D614		8-719-991-33	DIODE	1SS133T-77
D621		8-719-911-55	DIODE	U05G
D622		8-719-911-55	DIODE	U05G
D623		8-719-948-45	DIODE	ERA22-08
D624		8-719-991-33	DIODE	1SS133T-77
D625		8-719-991-33	DIODE	1SS133T-77
D626		8-719-109-93	DIODE	RD6.2ESB2
D627		8-719-510-48	DIODE	D1N20R
D628		8-719-063-70	DIODE	D1NL20U
D641		8-719-052-92	DIODE	D10SBS4F
D642		8-719-510-12	DIODE	D10SC4M
D643		8-719-028-45	DIODE	D2L20U
D644		8-719-028-45	DIODE	D2L20U
D645		8-719-028-45	DIODE	D2L20U
D646		8-719-028-45	DIODE	D2L20U
D647		8-719-063-70	DIODE	D1NL20U
D648	⚠	8-719-057-52	DIODE	EZ0150AV1
D649		8-719-510-02	DIODE	D1NS4
D650		8-719-510-02	DIODE	D1NS4

FUSE

REF.NO.		PART NO.	DESCRIPTION
F601	⚠	1-576-193-11	FUSE 6.3A/125V

FERRITE BEAD

REF.NO.	PART NO.	DESCRIPTION	
FB601	1-410-396-41	FERRITE	0.45µH
FB602	1-410-396-41	FERRITE	0.45µH
FB603	1-410-396-41	FERRITE	0.45µH
FB604	1-410-396-41	FERRITE	0.45µH
FB641	1-410-397-21	FERRITE	1.1µH
FB642	1-410-397-21	FERRITE	1.1µH
FB645	1-410-397-21	FERRITE	1.1µH
FB647	1-410-397-21	FERRITE	1.1µH

IC

REF.NO.		PART NO.	DESCRIPTION	
IC601	⚠	8-729-041-12	TRANSISTOR	MX0841AB-F
IC622		8-759-450-47	IC	BA05T
IC641		8-759-198-03	IC	PQ09RF21
IC643		8-749-012-13	IC	DM-58

COIL

REF.NO.	PART NO.	DESCRIPTION	
L642	1-412-529-11	INDUCTOR	22µH

TRANSISTOR

REF.NO.		PART NO.	DESCRIPTION	
Q621	⚠	8-729-044-30	TRANSISTOR	2SK2845-LB102
Q622	⚠	8-729-119-78	TRANSISTOR	2SC2785-HFE
Q644		8-729-119-78	TRANSISTOR	2SC2785-HFE
Q645		8-729-119-76	TRANSISTOR	2SA1175-HFE
Q646		8-729-119-76	TRANSISTOR	2SA1175-HFE
Q647		8-729-119-78	TRANSISTOR	2SC2785-HFE
Q648	⚠	8-729-922-39	TRANSISTOR	2SD2144S-V

RESISTOR

REF.NO.		PART NO.	DESCRIPTION		REMARK		
R603	⚠	1-219-776-11	CARBON	2.2M	10%	1/2W	
R607	⚠	1-202-933-61	FUSIBLE	0.1	10%	1/2W	F
R608		1-216-373-11	METAL	2.2	5%	2W	F
R611		1-216-373-11	METAL	2.2	5%	2W	F
R612		1-215-903-11	METAL	68K	5%	2W	F

Note:

The components identified by shading and mark ⚠ are critical for safety. Replace only with part number specified.

Note:

Les composants identifies per un trame et une marque ⚠ sont critiques pour la securite. Ne les remplacer que par une piece portant le numero specifie.

G HS

Complete Parts Listing

REF.NO.		PART NO.	DESCRIPTION				REMARK
R613		1-215-903-11	METAL	68K	5%	2W	F
R614		1-215-903-11	METAL	68K	5%	2W	F
R615		1-215-903-11	METAL	68K	5%	2W	F
R618		1-249-425-11	CARBON	4.7K	5%	1/4W	
R619		1-249-425-11	CARBON	4.7K	5%	1/4W	
R620		1-249-425-11	CARBON	4.7K	5%	1/4W	
R621		1-249-429-11	CARBON	10K	5%	1/4W	
R622		1-247-863-91	CARBON	22K	5%	1/4W	
R623	⚠	1-205-943-11	CEMENTED	1	5%	20W	
R624		1-260-131-11	CARBON	470K	5%	1/2W	
R625		1-260-131-11	CARBON	470K	5%	1/2W	
R626		1-249-425-11	CARBON	4.7K	5%	1/4W	
R627	⚠	1-220-797-11	CEMENTED	0.47	5%	10W	
R628		1-240-205-91	CARBON	22M	5%	1/2W	
R629	⚠	1-220-797-11	CEMENTED	0.47	5%	10W	
R632		1-249-421-11	CARBON	2.2K	5%	1/4W	
R633		1-249-429-11	CARBON	10K	5%	1/4W	
R634		1-249-437-11	CARBON	47K	5%	1/4W	
R635		1-247-791-91	CARBON	22	5%	1/4W	
R636		1-249-415-11	CARBON	680	5%	1/4W	
R637	⚠	1-260-302-51	CARBON	6.8	5%	1/2W	
R638		1-249-413-11	CARBON	470	5%	1/4W	
R639	⚠	1-249-389-11	CARBON	4.7	5%	1/4W	F
R640		1-215-485-00	METAL	470K	1%	1/4W	
R640		1-247-895-91	CARBON	470K	5%	1/4W	
R641		1-247-843-11	CARBON	3.3K	5%	1/4W	
R642		1-247-843-11	CARBON	3.3K	5%	1/4W	
R643		1-249-387-11	CARBON	3.3	5%	1/4W	F
R648		1-247-887-00	CARBON	220K	5%	1/4W	
R649		1-249-425-11	CARBON	4.7K	5%	1/4W	F
R659		1-249-429-11	CARBON	10K	5%	1/4W	
R660	⚠	1-249-393-11	CARBON	10	5%	1/4W	F
R661	⚠	1-249-419-11	CARBON	1.5K	5%	1/4W	F
R666	⚠	1-249-377-11	CARBON	0.47	5%	1/4W	F
R667	⚠	1-249-377-11	CARBON	0.47	5%	1/4W	F
R668	⚠	1-249-377-11	CARBON	0.47	5%	1/4W	F
R670	⚠	1-249-377-11	CARBON	0.47	5%	1/4W	F
R671	⚠	1-249-377-11	CARBON	0.47	5%	1/4W	F
R672	⚠	1-249-377-11	CARBON	0.47	5%	1/4W	F

RELAY

RY600	⚠	1-755-266-11	RELAY, AC POWER
RY601	⚠	1-755-146-11	RELAY, AC POWER

TRANSFORMER

T601	⚠	1-426-717-11	TRANSFORMER, LINE FILTER (LFT)
T602	⚠	1-426-717-11	TRANSFORMER, LINE FILTER (LFT)
T603	⚠	1-429-992-21	TRANSFORMER, CONVERTER (PRT)
T605	⚠	1-429-415-11	TRANSFORMER, CONVERTER (PIT)
T621	⚠	1-431-852-11	TRANSFORMER, CONVERTER (SRT)

THERMISTOR

THP601	⚠	1-809-539-11	THERMISTOR, POSITIVE

VARISTOR

VDR601	⚠	1-801-074-41	VARISTOR ERZV10D271
VDR602	⚠	1-801-074-41	VARISTOR ERZV10D271

HS

	*	**A-1372-507-A**	**HS BOARD, COMPLETE (KV-35S42/35S66 ONLY)**
	*	**A-1372-510-A**	**HS BOARD, COMPLETE (KV-32V42/35V42 ONLY)**
	*	**A-1372-519-A**	**HS BOARD, COMPLETE (KV-32S66 ONLY)**

CAPACITOR

C2168	1-104-665-11	ELECT (KV-32S66 ONLY)	100µF	20%	25V
C2169	1-126-959-11	ELECT (KV-32S66 ONLY)	0.47µF	20%	50V
C2170	1-164-096-11	CERAMIC (KV-32S66 ONLY)	0.01µF		50V

CONNECTOR

CN2101 *	1-564-524-11	PLUG,CONNECTOR 9P
CN2102 *	1-564-523-11	PLUG,CONNECTOR 8P (KV-32V42/S66/35V42 ONLY)

DIODE

D2106	1-810-039-11	LED UNIT (KV-32S66 ONLY)

IC

IC2103	8-742-134-00	HYB IC SBX1981-51P (KV-32S66 ONLY)

RESISTOR

R2109	1-216-033-00	RES,CHIP (KV-32S66 ONLY)	220	5%	1/10W
R2110	1-216-033-00	RES,CHIP (KV-32S66 ONLY)	220	5%	1/10W
R2159	1-216-047-91	RES,CHIP (KV-32S66 ONLY)	820	5%	1/10W
R2160	1-216-049-91	RES,CHIP (KV-32S66 ONLY)	1K	5%	1/10W
R2161	1-216-055-00	RES,CHIP (KV-32S66 ONLY)	1.8K	5%	1/10W
R2162	1-216-065-91	RES,CHIP (KV-32S66 ONLY)	4.7K	5%	1/10W
R2163	1-216-073-00	RES,CHIP (KV-32S66 ONLY)	10K	5%	1/10W
R2164	1-216-017-91	RES,CHIP (KV-32S66 ONLY)	47	5%	1/10W

SWITCH

S2101	1-692-431-21	SWITCH,TACTILE (KV-32S66 ONLY)
S2102	1-692-431-21	SWITCH,TACTILE (KV-32S66 ONLY)
S2103	1-692-431-21	SWITCH,TACTILE (KV-32S66 ONLY)
S2104	1-692-431-21	SWITCH,TACTILE (KV-32S66 ONLY)
S2105	1-692-431-21	SWITCH,TACTILE (KV-32S66 ONLY)

HS HV P

Complete Parts Listing

Note:

The components identified by shading and mark ⚠ are critical for safety. Replace only with part number specified.

Note:

Les composants identifies per un trame et une marque ⚠ sont critiques pour la securite. Ne les remplacer que par une piece portant le numero specifie.

REF.NO.	PART NO.	DESCRIPTION			REMARK
S2106	1-692-431-21	SWITCH,TACTILE (KV-32S66 ONLY)			
S2107	1-692-431-21	SWITCH,TACTILE (KV-32S66 ONLY)			

HV

REF.NO.	PART NO.	DESCRIPTION			REMARK
*	**A-1372-523-A**	**HV BOARD, COMPLETE (KV-35S66/35S42 ONLY)**			
*	**A-1372-684-A**	**HV BOARD, COMPLETE (KV-32V42/35V42 ONLY)**			
	CAPACITOR				
C2068	1-104-665-11	ELECT	100µF	20%	25V
C2070	1-165-319-11	CERAMIC	0.1µF		50V
C2072	1-164-096-11	CERAMIC	0.01µF		50V
C2233	1-136-161-00	FILM	0.047µF	5%	50V
		(KV-32V42/35V42 ONLY)			
C2234	1-126-960-11	ELECT	1µF	20%	50V
		(KV-32V42/35V42 ONLY)			
C2235	1-126-960-12	ELECT	1µF	20%	50V
		(KV-32V42/35V42 ONLY)			
	CONNECTOR				
CN2002 *	1-564-518-11	PLUG, CONNECTOR 3P			
		(KV-32V42/35V42 ONLY)			
	DIODE				
D2006	1-810-039-11	LED UNIT			
D2236	8-719-110-17	RD10ESB2 (KV-32V42/35V42 ONLY)			
	IC				
IC2003	8-742-134-00	HYB IC SBX1981-51P			
	JACK				
J2231	1-691-110-11	JACK, PIN 3P (KV-32V42/35V42 ONLY)			
	RESISTOR				
R2003	1-216-017-91	RES,CHIP	47	5%	1/10W
R2009	1-216-033-00	RES,CHIP	220	5%	1/10W
R2010	1-216-033-00	RES,CHIP	220	5%	1/10W
R2059	1-216-047-91	RES,CHIP	820	5%	1/10W
		(KV-35S66/35S42 ONLY)			
R2060	1-216-049-91	RES,CHIP	1K	5%	1/10W
		(KV-35S66/35S42 ONLY)			
R2061	1-216-055-00	RES,CHIP	1.8K	5%	1/10W
		(KV-35S66/35S42 ONLY)			
R2062	1-216-065-91	RES,CHIP	4.7K	5%	1/10W
		(KV-35S66/35S42 ONLY)			
R2063	1-216-073-00	RES,CHIP	10K	5%	1/10W
		(KV-35S66/35S42 ONLY)			
R2235	1-216-022-00	RES,CHIP	75	5%	1/10W
		(KV-32V42/35V42 ONLY)			
R2236	1-216-113-00	RES,CHIP	470K	5%	1/10W
		(KV-32V42/35V42 ONLY)			
R2237	1-216-065-91	RES,CHIP	4.7K	5%	1/10W
		(KV-32V42/35V42 ONLY)			
R2238	1-216-113-00	RES,CHIP	470K	5%	1/10W
		(KV-32V42/35V42 ONLY)			
R2239	1-216-065-91	RES,CHIP	4.7K	5%	1/10W
		(KV-32V42/35V42 ONLY)			
	SWITCH				
S2001	1-692-431-21	SWITCH, TACTILE (KV-32V42/35V42 ONLY)			
S2002	1-692-431-21	SWITCH, TACTILE (KV-32V42/35V42 ONLY)			
S2003	1-692-431-21	SWITCH, TACTILE (KV-32V42/35V42 ONLY)			
S2004	1-692-431-21	SWITCH, TACTILE (KV-32V42/35V42 ONLY)			
S2005	1-692-431-21	SWITCH, TACTILE (KV-32V42/35V42 ONLY)			
S2006	1-692-431-21	SWITCH, TACTILE (KV-32V42/35V42 ONLY)			
S2007	1-692-431-21	SWITCH, TACTILE (KV-32V42/35V42 ONLY)			

P

REF.NO.	PART NO.	DESCRIPTION			REMARK
*	**A-1195-154-A**	**P BOARD, COMPLETE (KV-32S66/35S66 ONLY)**			
	CAPACITOR				
C3301	1-163-031-11	CERAMIC	0.01µF		50V
C3302	1-163-031-11	CERAMIC	0.01µF		50V
C3303	1-104-664-11	ELECT	47µF	20%	16V
C3304	1-163-031-11	CERAMIC	0.01µF		50V
C3305	1-163-135-00	CERAMIC	560pF	5%	50V
C3306	1-163-038-91	CERAMIC	0.1µF		25V
C3307	1-163-038-91	CERAMIC	0.1µF		25V
C3308	1-164-222-11	CERAMIC	0.22µF		25V
C3309	1-163-034-00	CERAMIC	0.033µF		50V
C3310	1-164-222-11	CERAMIC	0.22µF		25V
C3311	1-163-233-11	CERAMIC	18pF	5%	50V
C3314	1-163-031-11	CERAMIC	0.01µF		50V
C3315	1-163-031-11	CERAMIC	0.01µF		50V
C3316	1-163-133-00	CERAMIC	470pF	5%	50V
C3317	1-163-133-00	CERAMIC	470pF	5%	50V
C3319	1-163-133-00	CERAMIC	470pF	5%	50V
C3323	1-104-664-11	ELECT	47µF	20%	16V
C3324	1-163-031-11	CERAMIC	0.01µF		50V
C3325	1-163-031-11	CERAMIC	0.01µF		50V
C3326	1-104-664-11	ELECT	47µF	20%	16V
C3327	1-104-664-11	ELECT	47µF	20%	16V
C3328	1-104-664-11	ELECT	47µF	20%	16V
C3330	1-126-964-11	ELECT	10µF	20%	50V
C3334	1-164-005-11	CERAMIC	0.47µF		25V
C3335	1-163-009-11	CERAMIC	0.001µF	10%	50V
C3336	1-163-031-11	CERAMIC	0.01µF		50V
C3339	1-163-005-11	CERAMIC	470pF	10%	50V
	CONNECTOR				
CN3301 *	1-691-632-21	CONNECTOR,BOARD TO BOARD 15P			
	DIODE				
D3301	8-719-073-01	DIODE	MA111-(K8).S0		
D3304	8-719-422-12	DIODE	MA8039		
	IC				
IC3301	8-759-599-43	IC	M65669FP-D61S		

Note:

The components identified by shading and mark ⚠ are critical for safety. Replace only with part number specified.

Note:

Les composants identifies per un trame et une marque ⚠ sont critiques pour la securite. Ne les remplacer que par une piece portant le numero specifie.

P UV

Complete Parts Listing

REF.NO.	PART NO.	DESCRIPTION				REMARK
	COIL					
L3301	1-410-682-31	INDUCTOR	470µH			
L3302	1-412-058-11	INDUCTOR	10µH			
L3303	1-412-058-11	INDUCTOR	10µH			
	TRANSISTOR					
Q3304	8-729-216-22	TRANSISTOR	2SA1162-G			
Q3305	8-729-216-22	TRANSISTOR	2SA1162-G			
Q3306	8-729-216-22	TRANSISTOR	2SA1162-G			
Q3309	8-729-422-27	TRANSISTOR	2SD601A-Q			
Q3310	8-729-422-27	TRANSISTOR	2SD601A-Q			
Q3311	8-729-111-55	TRANSISTOR	2SD1312-K			
Q3312	8-729-216-22	TRANSISTOR	2SA1162-G			
Q3313	8-729-422-27	TRANSISTOR	2SD601A-Q			
Q3314	8-729-422-27	TRANSISTOR	2SD601A-Q			
	RESISTOR					
R3301	1-216-057-00	RES,CHIP	2.2K	5%	1/10W	
R3302	1-216-121-91	RES,CHIP	1M	5%	1/10W	
R3303	1-216-057-00	RES,CHIP	2.2K	5%	1/10W	
R3304	1-216-133-00	RES,CHIP	3.3M	5%	1/10W	
R3305	1-216-037-00	RES,CHIP	330	5%	1/10W	
R3308	1-216-085-00	RES,CHIP	33K	5%	1/10W	
R3309	1-216-025-91	RES,CHIP	100	5%	1/10W	
R3310	1-216-025-91	RES,CHIP	100	5%	1/10W	
R3311	1-216-037-00	RES,CHIP	330	5%	1/10W	
R3312	1-216-043-91	RES,CHIP	560	5%	1/10W	
R3313	1-216-035-00	RES,CHIP	270	5%	1/10W	
R3316	1-216-295-91	SHORT				
R3317	1-216-295-91	SHORT				
R3318	1-216-061-00	RES,CHIP	3.3K	5%	1/10W	
R3319	1-216-295-91	SHORT				
R3328	1-216-295-91	SHORT				
R3329	1-216-033-00	RES,CHIP	220	5%	1/10W	
R3333	1-216-049-91	RES,CHIP	1K	5%	1/10W	
R3334	1-216-049-91	RES,CHIP	1K	5%	1/10W	
R3335	1-216-049-91	RES,CHIP	1K	5%	1/10W	
R3336	1-216-295-91	SHORT				
R3338	1-216-295-91	SHORT				
R3340	1-216-295-91	SHORT				
R3342	1-216-057-00	RES,CHIP	2.2K	5%	1/10W	
R3343	1-216-065-91	RES,CHIP	4.7K	5%	1/10W	
R3344	1-216-073-00	RES,CHIP	10K	5%	1/10W	
R3345	1-216-073-00	RES,CHIP	10K	5%	1/10W	
R3346	1-216-295-91	SHORT				
R3347	1-216-049-91	RES,CHIP	1K	5%	1/10W	
R3348	1-216-049-91	RES,CHIP	1K	5%	1/10W	
R3349	1-215-857-11	METAL	10	5%	1W	F
R3351	1-216-041-00	RES,CHIP	470	5%	1/10W	
R3352	1-216-295-91	SHORT				
R3353	1-216-295-91	SHORT				
R3357	1-216-041-00	RES,CHIP	470	5%	1/10W	

REF.NO.	PART NO.	DESCRIPTION				REMARK
R3358	1-216-689-11	RES,CHIP	39K	5%	1/10W	
R3359	1-216-113-00	RES,CHIP	470K	5%	1/10W	
R3360	1-216-051-00	RES,CHIP	1.2K	5%	1/10W	
R3361	1-216-045-00	RES,CHIP	680	5%	1/10W	
R3365	1-216-073-00	RES,CHIP	10K	5%	1/10W	
R3366	1-216-049-91	RES,CHIP	1K	5%	1/10W	
R3367	1-216-073-00	RES,CHIP	10K	5%	1/10W	
R3368	1-216-049-91	RES,CHIP	1K	5%	1/10W	
	CRYSTAL					
X3301	1-781-377-11	OSCILLATOR,CRYSTAL				

UV

REF.NO.	PART NO.	DESCRIPTION				REMARK
*	**A-1394-910-A**	**UV BOARD, COMPLETE (KV-32S66/35S66 ONLY)**				
*	**A-1394-905-A**	**UV BOARD, COMPLETE (KV-32V42/35V42 ONLY)**				
	CAPACITOR					
C100	1-164-346-11	CERAMIC (KV-32V42/35V42 ONLY)	1µF		16V	
C101	1-165-319-11	CERAMIC (KV-32V42/35V42 ONLY)	0.1µF		50V	
C102	1-164-346-11	CERAMIC (KV-32V42/35V42 ONLY)	1µF		16V	
C103	1-163-017-00	CERAMIC (KV-32V42/35V42 ONLY)	0.0047µF	10%	50V	
C104	1-164-005-11	CERAMIC (KV-32V42/35V42 ONLY)	0.47µF		25V	
C105	1-164-005-11	CERAMIC (KV-32V42/35V42 ONLY)	0.47µF		25V	
C150	1-126-956-91	ELECT	0.1µF	20%	50V	
C153	1-163-017-00	CERAMIC	0.0047µF	10%	50V	
C154	1-126-963-11	ELECT	4.7µF	20%	50V	
C155	1-126-963-11	ELECT	4.7µF	20%	50V	
C156	1-126-963-11	ELECT	4.7µF	20%	50V	
C158	1-126-963-11	ELECT	4.7µF	20%	50V	
C160	1-126-964-11	ELECT	10µF	20%	50V	
C161	1-126-956-91	ELECT	0.1µF	20%	50V	
C162	1-163-017-00	CERAMIC	0.0047µF	10%	50V	
C163	1-104-664-11	ELECT	47µF	20%	25V	
C164	1-165-319-11	CERAMIC	0.1µF		50V	
C165	1-126-964-11	ELECT	10µF	20%	50V	
C168	1-126-963-11	ELECT	4.7µF	20%	50V	
C171	1-126-941-11	ELECT	470µF	20%	25V	
C172	1-126-959-11	ELECT	0.47µF	20%	50V	
C173	1-126-959-11	ELECT	0.47µF	20%	50V	
C174	1-126-964-11	ELECT (KV-32V42/35V42 ONLY)	10µF	20%	50V	
C176	1-126-964-11	ELECT	10µF	20%	50V	
C177	1-126-964-11	ELECT	10µF	20%	50V	
C178	1-126-964-11	ELECT	10µF	20%	50V	

UV

Complete Parts Listing

Note:

The components identified by shading and mark ⚠ are critical for safety. Replace only with part number specified.

Note:

Les composants identifies per un trame et une marque ⚠ sont critiques pour la securite. Ne les remplacer que par une piece portant le numero specifie.

REF.NO.	PART NO.	DESCRIPTION				REMARK
		(KV-32V42/35V42 ONLY)				
C179	1-164-182-11	CERAMIC	0.0033µF	10%	50V	
		(KV-32V42/35V42 ONLY)				
C180	1-164-182-11	CERAMIC	0.0033µF	10%	50V	
		(KV-32V42/35V42 ONLY)				
C181	1-163-989-11	CERAMIC	0.033µF	10%	25V	
		(KV-32V42/35V42 ONLY)				
C182	1-163-989-11	CERAMIC	0.033µF	10%	25V	
		(KV-32V42/35V42 ONLY)				
C183	1-163-227-11	CERAMIC	10pF	0.50%	50V	
		(KV-32V42/35V42 ONLY)				
C184	1-163-227-11	CERAMIC	10pF	0.50%	50V	
		(KV-32V42/35V42 ONLY)				
C185	1-163-227-11	CERAMIC	10pF	0.50%	50V	
		(KV-32V42/35V42 ONLY)				
C187	1-126-964-11	ELECT	10µF	20%	50V	
		(KV-32V42/35V42 ONLY)				
C188	1-126-956-91	ELECT	0.1µF	20%	50V	
		(KV-32V42/35V42 ONLY)				
C189	1-126-956-91	ELECT	0.1µF	20%	50V	
		(KV-32V42/35V42 ONLY)				
C190	1-163-986-00	CERAMIC	0.027µF	10%	25V	
		(KV-32V42/35V42 ONLY)				
C191	1-163-017-00	CERAMIC	0.0047µF	10%	50V	
		(KV-32V42/35V42 ONLY)				
C192	1-163-005-11	CERAMIC	470pF	10%	50V	
		(KV-32V42/35V42 ONLY)				
C193	1-165-319-11	CERAMIC	0.1µF		50V	
		(KV-32V42/35V42 ONLY)				
C194	1-163-023-00	CERAMIC	0.015µF	10%	50V	
		(KV-32V42/35V42 ONLY)				
C195	1-164-161-11	CERAMIC	0.0022µF	10%	50V	
		(KV-32V42/35V42 ONLY)				
C196	1-126-965-11	ELECT	22µF	20%	50V	
		(KV-32V42/35V42 ONLY)				
C197	1-165-319-11	CERAMIC	0.1µF		50V	
		(KV-32V42/35V42 ONLY)				
C198	1-126-960-11	ELECT	1µF	20%	50V	
		(KV-32V42/35V42 ONLY)				
C199	1-165-319-11	CERAMIC	0.1µF		50V	
		(KV-32V42/35V42 ONLY)				
C231	1-163-031-11	CERAMIC	0.01µF		50V	
C232	1-136-161-00	FILM	0.047µF	5%	50V	
C233	1-136-161-00	FILM	0.047µF	5%	50V	
C234	1-126-960-11	ELECT	1µF	20%	50V	
C235	1-126-960-11	ELECT	1µF	20%	50V	
C236	1-136-161-00	FILM	0.047µF	5%	50V	
C237	1-126-960-11	ELECT	1µF	20%	50V	
C238	1-126-960-11	ELECT	1µF	20%	50V	
C241	1-126-941-11	ELECT	470µF	20%	25V	
		(KV-32V42/35V42 ONLY)				
C242	1-126-959-11	ELECT	0.47µF	20%	50V	
		(KV-32V42/35V42 ONLY)				
C244	1-126-959-11	ELECT	0.47µF	20%	50V	
		(KV-32V42/35V42 ONLY)				

REF.NO.	PART NO.	DESCRIPTION				REMARK
C261	1-136-161-00	FILM	0.047µF	5%	50V	
		(KV-32S66/35S66 ONLY)				
C262	1-104-664-11	ELECT	47µF	20%	25V	
C263	1-136-161-00	FILM	0.047µF	5%	50V	
C264	1-126-941-11	ELECT	470µF	20%	25V	
C266	1-126-960-11	ELECT	1µF	20%	50V	
		(KV-32S66/35S66 ONLY)				
C267	1-126-960-11	ELECT	1µF	20%	50V	
		(KV-32S66/35S66 ONLY)				
C270	1-126-960-11	ELECT	1µF	20%	50V	
C271	1-126-960-11	ELECT	1µF	20%	50V	
C275	1-104-664-11	ELECT	47µF	20%	25V	
C276	1-163-251-11	CERAMIC	100pF	5%	50V	
	CONNECTOR					
CN261	1-691-632-21	CONNECTOR, BOARD TO BOARD 15P				
CN262	1-573-301-21	CONNECTOR, BOARD TO BOARD 20P				
CN263	1-564-506-11	PLUG, CONNECTOR 3P				
CN264	1-573-979-21	CONNECTOR, BOARD TO BOARD 11P				
	DIODE					
D100	8-719-981-99	DIODE MTZJ-3.3				
D231	8-719-110-17	DIODE RD10ESB2				
D232	8-719-110-17	DIODE RD10ESB2				
D233	8-719-110-17	DIODE RD10ESB2				
D234	8-719-110-17	DIODE RD10ESB2				
D235	8-719-110-17	DIODE RD10ESB2				
D236	8-719-110-17	DIODE RD10ESB2				
D237	8-719-981-99	DIODE MTZJ-3.3 (KV-32V42/35V42 ONLY)				
D238	8-719-981-99	DIODE MTZJ-3.3 (KV-32V42/35V42 ONLY)				
D240	8-719-110-17	DIODE RD10ESB2				
D241	8-719-110-17	DIODE RD10ESB2				
D242	8-719-110-17	DIODE RD10ESB2				
D243	8-719-110-17	DIODE RD10ESB2				
D244	8-719-110-17	DIODE RD10ESB2				
D264	8-719-110-17	DIODE RD10ESB2				
D265	8-719-110-17	DIODE RD10ESB2				
D902	8-719-110-17	DIODE RD10ESB2 (KV-32S66/35S66 ONLY)				
	IC					
IC100	8-752-072-39	IC CXA2021S				
IC101	8-759-100-96	IC NJM4558M-TE2				
IC102	8-759-537-25	IC NJM2150M-TE2 (KV-32V42/35V42 ONLY)				
IC103	8-759-537-26	IC TDA7467D013TR (KV-32V42/35V42 ONLY)				
IC261	8-759-534-81	IC MM1313AD/ (KV-32S66/35S66 ONLY)				
IC261	8-759-366-77	IC MM1311AD (KV-32V42/35V42 ONLY)				
	JACK					
J231	1-750-515-11	TERMINAL BLOCK, S 3P				
J232	1-750-517-11	JACK BLOCK, PIN 3P				
J233	1-750-516-11	JACK BLOCK, PIN 2P				
J234	1-750-517-11	JACK BLOCK, PIN 3P (KV-32V42/35V42 ONLY)				
J902	1-764-143-11	JACK 3P (KV-32S66/35S66 ONLY)				
J903	1-764-143-11	JACK 3P (KV-32S66/35S66 ONLY)				
J904	1-764-143-11	JACK 3P (KV-32S66/35S66 ONLY)				

Note:

The components identified by shading and mark ⚠ are critical for safety. Replace only with part number specified.

Note:

Les composants identifies per un trame et une marque ⚠ sont critiques pour la securite. Ne les remplacer que par une piece portant le numero specifie.

UV

Complete Parts Listing

CHIP CONDUCTOR

REF.NO.	PART NO.	DESCRIPTION	REMARK
JR101	1-216-295-91	SHORT	
JR106	1-216-295-91	SHORT (KV-32V42/35V42 ONLY)	
JR107	1-216-295-91	SHORT (KV-32V42/35V42 ONLY)	
JR109	1-216-295-91	SHORT	
JR147	1-216-295-91	SHORT (KV-32S66/35S66 ONLY)	
JR148	1-216-295-91	SHORT (KV-32S66/35S66 ONLY)	
JR201	1-216-295-91	SHORT	
JR204	1-216-295-91	SHORT	
JR205	1-216-295-91	SHORT	
JR269	1-216-295-91	SHORT	
JR270	1-216-295-91	SHORT	
JR272	1-216-295-91	SHORT	
JR273	1-216-295-91	SHORT	
JR274	1-216-295-91	SHORT	
JR276	1-216-295-91	SHORT	
JR901	1-216-295-91	SHORT (KV-32S66/35S66 ONLY)	
JR902	1-216-295-91	SHORT (KV-32V42/35V42 ONLY)	
JR903	1-216-295-91	SHORT (KV-32V42/35V42 ONLY)	

TRANSISTOR

REF.NO.	PART NO.	DESCRIPTION	REMARK
Q100	8-729-422-27	TRANSISTOR 2SD601A-Q	
Q101	8-729-422-27	TRANSISTOR 2SD601A-Q	
Q231	8-729-422-27	TRANSISTOR 2SD601A-Q (KV-32V42/35V42 ONLY)	
Q233	8-729-422-27	TRANSISTOR 2SD601A-Q (KV-32V42/35V42 ONLY)	
Q234	8-729-422-27	TRANSISTOR 2SD601A-Q (KV-32V42/35V42 ONLY)	
Q238	8-729-216-22	TRANSISTOR 2SA1162-G (KV-32V42/35V42 ONLY)	
Q239	8-729-216-22	TRANSISTOR 2SA1162-G (KV-32V42/35V42 ONLY)	
Q237	8-729-216-22	TRANSISTOR 2SA1162-G	
Q243	8-729-216-22	TRANSISTOR 2SA1162-G	
Q261	8-729-422-27	TRANSISTOR 2SD601A-Q (KV-32S66/35S66 ONLY)	
Q262	8-729-422-27	TRANSISTOR 2SD601A-Q	
Q263	8-729-216-22	TRANSISTOR 2SA1162-G	
Q265	8-729-216-22	TRANSISTOR 2SA1162-G	

RESISTOR

REF.NO.	PART NO.	DESCRIPTION	REMARK
R100	1-216-033-00	RES,CHIP 220 5% 1/10W	
R101	1-216-033-00	RES,CHIP 220 5% 1/10W	
R102	1-216-073-00	RES,CHIP 10K 5% 1/10W	
R103	1-216-081-00	RES,CHIP 22K 5% 1/10W (KV-32S66/35S66 ONLY)	
R103	1-216-085-00	RES,CHIP 33K 5% 1/10W (KV-32V42/35V42 ONLY)	
R104	1-216-089-91	RES,CHIP 47K 5% 1/10W	
R105	1-216-089-91	RES,CHIP 47K 5% 1/10W	
R106	1-216-049-91	RES,CHIP 1K 5% 1/10W	
R107	1-216-049-91	RES,CHIP 1K 5% 1/10W	
R108	1-216-073-00	RES,CHIP 10K 5% 1/10W	
R109	1-216-089-91	RES,CHIP 47K 5% 1/10W	
R110	1-216-089-91	RES,CHIP 47K 5% 1/10W	
R111	1-216-025-91	RES,CHIP 100 5% 1/10W	
R112	1-216-121-91	RES,CHIP 1M 5% 1/10W	
R113	1-216-081-00	RES,CHIP 22K 5% 1/10W (KV-32V42/35V42 ONLY)	
R114	1-216-081-00	RES,CHIP 22K 5% 1/10W (KV-32V42/35V42 ONLY)	
R115	1-216-081-00	RES,CHIP 22K 5% 1/10W (KV-32V42/35V42 ONLY)	
R116	1-216-081-00	RES,CHIP 22K 5% 1/10W (KV-32V42/35V42 ONLY)	
R117	1-216-073-00	RES,CHIP 10K 5% 1/10W (KV-32V42/35V42 ONLY)	
R118	1-216-073-00	RES,CHIP 10K 5% 1/10W (KV-32V42/35V42 ONLY)	
R119	1-216-073-00	RES,CHIP 10K 5% 1/10W (KV-32V42/35V42 ONLY)	
R124	1-216-033-00	RES,CHIP 220 5% 1/10W (KV-32V42/35V42 ONLY)	
R125	1-216-033-00	RES,CHIP 220 5% 1/10W (KV-32V42/35V42 ONLY)	
R126	1-216-063-91	RES,CHIP 3.9K 5% 1/10W (KV-32V42/35V42 ONLY)	
R127	1-216-089-91	RES,CHIP 47K 5% 1/10W (KV-32V42/35V42 ONLY)	
R128	1-216-085-00	RES,CHIP 33K 5% 1/10W (KV-32V42/35V42 ONLY)	
R129	1-216-053-00	RES,CHIP 1.5K 5% 1/10W (KV-32V42/35V42 ONLY)	
R130	1-216-100-00	RES,CHIP 130K 5% 1/10W (KV-32V42/35V42 ONLY)	
R131	1-216-049-91	RES,CHIP 1K 5% 1/10W (KV-32V42/35V42 ONLY)	
R132	1-216-088-00	RES,CHIP 43K 5% 1/10W (KV-32V42/35V42 ONLY)	
R133	1-216-061-00	RES,CHIP 3.3K 5% 1/10W	
R134	1-216-061-00	RES,CHIP 3.3K 5% 1/10W	
R135	1-216-097-91	RES,CHIP 100K 5% 1/10W	
R136	1-216-081-00	RES,CHIP 22K 5% 1/10W (KV-32S66/35S66 ONLY)	
R136	1-216-085-00	RES,CHIP 33K 5% 1/10W (KV-32V42/35V42 ONLY)	
R137	1-216-025-91	RES,CHIP 100 5% 1/10W	
R201	1-216-065-91	RES,CHIP 4.7K 5% 1/10W (KV-32V42/35V42 ONLY)	
R202	1-216-049-91	RES,CHIP 1K 5% 1/10W (KV-32V42/35V42 ONLY)	
R203	1-216-069-00	RES,CHIP 6.8K 5% 1/10W (KV-32V42/35V42 ONLY)	
R204	1-216-069-00	RES,CHIP 6.8K 5% 1/10W (KV-32V42/35V42 ONLY)	
R212	1-249-440-11	CARBON 82K 5% 1/4W	
R213	1-216-065-91	RES,CHIP 4.7K 5% 1/10W	

UV WA

Complete Parts Listing

Note:

The components identified by shading and mark ⚠ are critical for safety. Replace only with part number specified.

Note:

Les composants identifies per un trame et une marque ⚠ sont critiques pour la securite. Ne les remplacer que par une piece portant le numero specifie.

REF.NO.	PART NO.	DESCRIPTION				REMARK
		(KV-32V42/35V42 ONLY)				
R214	1-216-065-91	RES,CHIP	4.7K	5%	1/10W	
		(KV-32V42/35V42 ONLY)				
R215	1-249-413-11	CARBON	470	5%	1/4W	
R216	1-216-025-91	RES,CHIP	100	5%	1/10W	
R217	1-216-025-91	RES,CHIP	100	5%	1/10W	
		(KV-32V42/35V42 ONLY)				
R218	1-216-025-91	RES,CHIP	100	5%	1/10W	
		(KV-32V42/35V42 ONLY)				
R228	1-216-033-00	RES,CHIP	220	5%	1/10W	
R229	1-216-025-91	RES,CHIP	100	5%	1/10W	
R230	1-216-033-00	RES,CHIP	220	5%	1/10W	
R231	1-216-022-00	RES,CHIP	75	5%	1/10W	
R232	1-216-022-00	RES,CHIP	75	5%	1/10W	
R233	1-216-065-91	RES,CHIP	4.7K	5%	1/10W	
R234	1-216-022-00	RES,CHIP	75	5%	1/10W	
R235	1-216-113-00	RES,CHIP	470K	5%	1/10W	
R236	1-216-065-91	RES,CHIP	4.7K	5%	1/10W	
R237	1-216-113-00	RES,CHIP	470K	5%	1/10W	
R238	1-216-065-91	RES,CHIP	4.7K	5%	1/10W	
R239	1-216-022-00	RES,CHIP	75	5%	1/10W	
R240	1-216-113-00	RES,CHIP	470K	5%	1/10W	
R241	1-216-065-91	RES,CHIP	4.7K	5%	1/10W	
R242	1-216-113-00	RES,CHIP	470K	5%	1/10W	
R243	1-216-065-91	RES,CHIP	4.7K	5%	1/10W	
R244	1-216-113-00	RES,CHIP	470K	5%	1/10W	
R245	1-249-417-11	CARBON	1K	5%	1/4W	
R246	1-216-113-00	RES,CHIP	470K	5%	1/10W	
R247	1-249-417-11	CARBON	1K	5%	1/4W	
R248	1-216-021-00	RES,CHIP	68	5%	1/10W	
		(KV-32V42/35V42 ONLY)				
R249	1-216-113-00	RES,CHIP	470K	5%	1/10W	
		(KV-32V42/35V42 ONLY)				
R250	1-216-113-00	RES,CHIP	470K	5%	1/10W	
		(KV-32V42/35V42 ONLY)				
R251	1-216-113-00	RES,CHIP	470K	5%	1/10W	
		(KV-32V42/35V42 ONLY)				
R256	1-216-069-00	RES,CHIP	6.8K	5%	1/10W	
		(KV-32V42/35V42 ONLY)				
R259	1-216-065-91	RES,CHIP	4.7K	5%	1/10W	
		(KV-32V42/35V42 ONLY)				
R261	1-216-009-91	RES,CHIP	22	5%	1/10W	
		(KV-32S66/35S66 ONLY)				
R264	1-247-815-91	CARBON	220	5%	1/4W	
R265	1-247-815-91	CARBON	220	5%	1/4W	
R266	1-216-295-91	SHORT (KV-32S66/35S66 ONLY)				
R267	1-249-415-11	CARBON	680	5%	1/4W	
		(KV-32S66/35S66 ONLY)				
R268	1-216-025-91	RES,CHIP	100	5%	1/10W	
R269	1-216-025-91	RES,CHIP	100	5%	1/10W	
R270	1-216-041-00	RES,CHIP	470	5%	1/10W	
R271	1-249-415-11	CARBON	680	5%	1/4W	
R272	1-249-417-11	CARBON	1K	5%	1/4W	
R274	1-249-413-11	CARBON	470	5%	1/4W	
R275	1-249-425-11	CARBON	4.7K	5%	1/4W	
		(KV-32S66/35S66 ONLY)				
R276	1-249-425-11	CARBON	4.7K	5%	1/4W	
		(KV-32S66/35S66 ONLY)				
R277	1-216-049-91	RES,CHIP	1K	5%	1/10W	
R279	1-216-025-91	RES,CHIP	100	5%	1/10W	
R280	1-216-033-00	RES,CHIP	220	5%	1/10W	
R281	1-216-033-00	RES,CHIP	220	5%	1/10W	
R282	1-216-025-91	RES,CHIP	100	5%	1/10W	
R283	1-216-025-91	RES,CHIP	100	5%	1/10W	
R284	1-216-065-91	RES,CHIP	4.7K	5%	1/10W	
R285	1-216-065-91	RES,CHIP	4.7K	5%	1/10W	
R286	1-216-049-91	RES,CHIP	1K	5%	1/10W	
R288	1-247-815-91	CARBON	220	5%	1/4W	
		(KV-32V42/35V42 ONLY)				
R289	1-247-815-91	CARBON	220	5%	1/4W	
		(KV-32V42/35V42 ONLY)				
R290	1-247-815-91	CARBON	220	5%	1/4W	
		(KV-32V42/35V42 ONLY)				
R291	1-216-025-91	RES,CHIP	100	5%	1/10W	
R292	1-216-025-91	RES,CHIP	100	5%	1/10W	
		(KV-32V42/35V42 ONLY)				
R293	1-216-025-91	RES,CHIP	100	5%	1/10W	
		(KV-32S66/35S66 ONLY)				
R294	1-216-049-91	RES,CHIP	1K	5%	1/10W	
R902	1-249-405-11	CARBON	100	5%	1/4W	F
R919	1-216-295-91	SHORT (KV-32S66/35S66 ONLY)				
R920	1-249-405-11	CARBON	100	5%	1/4W	F
R921	1-249-405-11	CARBON	100	5%	1/4W	F
R922	1-216-049-91	RES,CHIP	1K	5%	1/10W	
		(KV-32S66/35S66 ONLY)				
R923	1-216-049-91	RES,CHIP	1K	5%	1/10W	
		(KV-32S66/35S66 ONLY)				

WA

REF.NO.	PART NO.	DESCRIPTION				REMARK
*	**A-1372-462-A**	**WA BOARD, COMPLETE**				
		(KV-35S42/35S66/35V42 ONLY)				
	4-382-854-11	SCREW (M3X10), P, SW (+)				
	CAPACITOR					
C941	1-126-935-11	ELECT	470µF	20%	16V	
C944	1-163-021-91	CERAMIC	0.01µF	10%	50V	
C945	1-163-001-11	CERAMIC	220pF	10%	50V	
C946	1-126-933-11	ELECT	100µF	20%	16V	
C949	1-161-830-00	CERAMIC	0.0047µF		500V	
C950	1-126-933-11	ELECT	100µF	20%	16V	
C951	1-107-638-11	ELECT	33µF	20%	160V	
C952	1-104-999-11	MYLAR	0.1µF	10%	200V	
C953	1-106-383-00	MYLAR	0.047µF	10%	200V	
C954	1-130-471-00	FILM	0.001µF	5%	50V	

Note:

The components identified by shading and mark ⚠ are critical for safety. Replace only with part number specified.

Note:

Les composants identifies per un trame et une marque ⚠ sont critiques pour la securite. Ne les remplacer que par une piece portant le numero specifie.

WA

Complete Parts Listing

REF.NO.	PART NO.	DESCRIPTION				REMARK
C955	1-107-667-11	ELECT	2.2µF	20%	160V	
C956	1-130-471-00	FILM	0.001µF	5%	50V	
C957	1-106-383-00	MYLAR	0.047µF	10%	200V	
C958	1-126-933-11	ELECT	100µF	20%	16V	
C961	1-163-251-11	CERAMIC	100pF	5%	50V	
C962	1-163-021-91	CERAMIC	0.01µF	10%	50V	
C965	1-163-035-00	CERAMIC	0.047µF		50V	
C966	1-163-009-11	CERAMIC	0.001µF	10%	50V	
C967	1-129-718-00	FILM	0.022µF	5%	630V	
C968	1-137-579-11	FILM	0.068µF	5%	100V	
C969	1-163-035-00	CERAMIC	0.047µF		50V	
C981	1-126-941-11	ELECT	470µF	20%	25V	
C983	1-137-366-11	FILM	0.0022µF	5%	50V	
	CONNECTOR					
CN941	1-564-511-11	PLUG, CONNECTOR 8P				
CN961	1-770-723-11	CONNECTOR, BOARD TO BOARD 8P				
CN981	1-564-506-11	PLUG, CONNECTOR 3P				
	DIODE					
D941	8-719-991-33	DIODE	1SS133T-77			
D946	8-719-110-88	DIODE	RD39ESB2			
D947	8-719-110-88	DIODE	RD39ESB2			
D961	8-719-109-89	DIODE	RD5.6ESB2			
D962	8-719-991-33	DIODE	1SS133T-77			
D964	8-719-302-43	DIODE	EL1Z			
	IC					
IC961	8-759-700-07	IC	NJM2903M			
IC981	8-759-603-37	IC	M5216P			
	COIL					
L942	1-215-863-11	METAL	100	5%	1W	F
L962	1-406-989-21	INDUCTOR	10µH			
L963	1-406-675-11	INDUCTOR	4.7µH			
	TRANSISTOR					
Q943	8-729-422-27	TRANSISTOR	2SD601A-Q			
Q944	8-729-422-27	TRANSISTOR	2SD601A-Q			
Q945	8-729-422-27	TRANSISTOR	2SD601A-Q			
Q946	8-729-017-05	TRANSISTOR	2SA1837			
Q947	8-729-017-06	TRANSISTOR	2SC4793			
Q962	8-729-931-45	TRANSISTOR	IRF614			
Q963	8-729-216-22	TRANSISTOR	2SA1162-G			
Q965	8-729-422-27	TRANSISTOR	2SD601A-Q			
Q966	8-729-216-22	TRANSISTOR	2SA1162-G			
Q981	8-729-422-27	TRANSISTOR	2SD601A-Q			
	RESISTOR					
R943	1-216-025-91	RES,CHIP	100	5%	1/10W	
R948	1-216-049-91	RES,CHIP	1K	5%	1/10W	
R949	1-216-049-91	RES,CHIP	1K	5%	1/10W	
R950	1-216-049-91	RES,CHIP	1K	5%	1/10W	
R951	1-216-049-91	RES,CHIP	1K	5%	1/10W	
R952	1-216-037-00	RES,CHIP	330	5%	1/10W	
R953	1-216-021-00	RES,CHIP	68	5%	1/10W	
R954	1-216-033-00	RES,CHIP	220	5%	1/10W	
R955	1-216-047-91	RES,CHIP	820	5%	1/10W	
R956	1-216-295-91	SHORT				
R957	1-216-073-00	RES,CHIP	10K	5%	1/10W	
R958	1-216-295-91	SHORT				
R959	1-216-021-00	RES,CHIP	68	5%	1/10W	
R960	1-216-689-11	RES,CHIP	39K	5%	1/10W	
R961	1-216-073-00	RES,CHIP	10K	5%	1/10W	
R962	1-216-057-00	RES,CHIP	2.2K	5%	1/10W	
R963	1-216-097-91	RES,CHIP	100K	5%	1/10W	
R964	1-216-073-00	RES,CHIP	10K	5%	1/10W	
R965	1-216-073-00	RES,CHIP	10K	5%	1/10W	
R966	1-216-097-91	RES,CHIP	100K	5%	1/10W	
R967	1-216-065-91	RES,CHIP	4.7K	5%	1/10W	
R968	1-216-083-00	RES,CHIP	27K	5%	1/10W	
R969	1-216-295-91	SHORT				
R970	1-216-033-00	RES,CHIP	220	5%	1/10W	
R971	1-247-899-11	CARBON	680K	5%	1/4W	
R972	1-216-073-00	RES,CHIP	10K	5%	1/10W	
R973	1-216-121-91	RES,CHIP	1M	5%	1/10W	
R974	1-216-073-00	RES,CHIP	10K	5%	1/10W	
R975	⚠ 1-216-446-00	METAL	18	5%	2W	F
R976	⚠ 1-216-423-11	METAL	27	5%	1W	F
R979	1-216-017-91	RES,CHIP	47	5%	1/10W	
R981	1-216-081-00	RES,CHIP	22K	5%	1/10W	
R982	1-216-081-00	RES,CHIP	22K	5%	1/10W	
R983	1-216-081-00	RES,CHIP	22K	5%	1/10W	
R984	1-216-081-00	RES,CHIP	22K	5%	1/10W	
R987	1-216-049-91	RES,CHIP	1K	5%	1/10W	
R988	1-216-295-91	SHORT				
R989	1-216-304-11	RES,CHIP	3.3	5%	1/10W	
R992	1-216-073-00	RES,CHIP	10K	5%	1/10W	
R1941	1-260-311-51	CARBON	39	5%	1/2W	
R1942	1-249-384-11	CARBON	1.8	5%	1/4W	F
R1943	1-249-414-11	CARBON	560	5%	1/4W	F
R1944	1-249-432-11	CARBON	18K	5%	1/4W	
R1945	1-216-476-11	METAL	180	5%	3W	F
R1946	1-249-417-11	CARBON	1K	5%	1/4W	F
R1947	1-249-432-11	CARBON	18K	5%	1/4W	
R1948	1-249-414-11	CARBON	560	5%	1/4W	
R1949	1-249-384-11	CARBON	1.8	5%	1/4W	F
R1950	1-249-400-11	CARBON	39	5%	1/4W	F

WB

REF.NO.	PART NO.	DESCRIPTION				REMARK
*	A-1372-508-A	WB BOARD, COMPLETE (KV-32S42/32S66/32V42 ONLY)				
	4-382-854-11	SCREW (M3X10), P, SW (+)				
	CAPACITOR					
C2941	1-126-935-11	ELECT	470µF	20%	16V	
C2944	1-163-021-91	CERAMIC	0.01µF	10%	50V	
C2946	1-126-933-11	ELECT	100µF	20%	16V	

WB

Complete Parts Listing

Note:

The components identified by shading and mark ⚠ are critical for safety. Replace only with part number specified.

Note:

Les composants identifies per un trame et une marque ⚠ sont critiques pour la securite. Ne les remplacer que par une piece portant le numero specifie.

REF.NO.	PART NO.	DESCRIPTION				REMARK
C2949	1-161-830-00	CERAMIC	0.0047µF		500V	
C2950	1-126-933-11	ELECT	100µF	20%	16V	
C2951	1-107-638-11	ELECT	33µF	20%	160V	
C2952	1-104-999-11	MYLAR	0.1µF	10%	200V	
C2953	1-106-383-00	MYLAR	0.047µF	10%	200V	
C2954	1-130-471-00	FILM	0.001µF	5%	50V	
C2955	1-107-667-11	ELECT	2.2µF	20%	160V	
C2956	1-130-471-00	FILM	0.001µF	5%	50V	
C2957	1-106-383-00	MYLAR	0.047µF	10%	200V	
C2958	1-126-933-11	ELECT	100µF	20%	16V	
C2975	1-163-001-11	CERAMIC	220pF	10%	50V	
	CONNECTOR					
CN2941 *	1-564-508-11	PLUG, CONNECTOR 5P				
	DIODE					
D2941	8-719-991-33	DIODE	1SS133T-77			
D2946	8-719-110-88	DIODE	RD39ESB2			
D2947	8-719-110-88	DIODE	RD39ESB2			
	COIL					
L2942	1-215-863-11	METAL	100	5%	1W	F
	TRANSISTOR					
Q2943	8-729-422-27	TRANSISTOR	2SD601A-Q			
Q2944	8-729-422-27	TRANSISTOR	2SD601A-Q			
Q2945	8-729-422-27	TRANSISTOR	2SD601A-Q			
Q2946	8-729-017-05	TRANSISTOR	2SA1837			
Q2947	8-729-017-06	TRANSISTOR	2SC4793			
Q2965	8-729-422-27	TRANSISTOR	2SD601A-Q			
Q2966	8-729-216-22	TRANSISTOR	2SA1162-G			
	RESISTOR					
R2943	1-216-025-91	RES,CHIP	100	5%	1/10W	
R2948	1-216-049-91	RES,CHIP	1K	5%	1/10W	
R2949	1-216-049-91	RES,CHIP	1K	5%	1/10W	
R2950	1-216-049-91	RES,CHIP	1K	5%	1/10W	
R2951	1-216-049-91	RES,CHIP	1K	5%	1/10W	
R2952	1-216-037-00	RES,CHIP	330	5%	1/10W	
R2953	1-216-021-00	RES,CHIP	68	5%	1/10W	
R2954	1-216-033-00	RES,CHIP	220	5%	1/10W	
R2955	1-216-047-91	RES,CHIP	820	5%	1/10W	
R2956	1-216-295-91	SHORT				
R2957	1-216-073-00	RES,CHIP	10K	5%	1/10W	
R2958	1-216-295-91	SHORT				
R2959	1-216-021-00	RES,CHIP	68	5%	1/10W	
R2979	1-216-017-91	RES,CHIP	47	5%	1/10W	
R4941	1-260-311-51	CARBON	39	5%	1/2W	
R4942	1-249-384-11	CARBON	1.8	5%	1/4W	F
R4943	1-249-414-11	CARBON	560	5%	1/4W	F
R4944	1-249-432-11	CARBON	18K	5%	1/4W	
R4945	1-216-476-11	METAL	180	5%	3W	F
R4946	1-249-417-11	CARBON	1K	5%	1/4W	F
R4947	1-249-432-11	CARBON	18K	5%	1/4W	
R4948	1-249-414-11	CARBON	560	5%	1/4W	
R4949	1-249-384-11	CARBON	1.8	5%	1/4W	F
R4950	1-249-400-11	CARBON	39	5%	1/4W	F

ACCESSORIES & PACKING

	PART NO.	DESCRIPTION
*	4-041-259-01	BAG, PROTECTION (KV-32S42/32S66/32V42 ONLY)
*	4-053-658-01	BAG, PROTECTION (KV-35S42/35S66/35V42 ONLY)
*	4-053-276-03	CARTON, INDIVIDUAL (KV-35V42 ONLY)
*	4-054-073-14	CARTON, INDIVIDUAL (KV-32V42 ONLY)
*	4-056-782-01	CARTON, INDIVIDUAL (KV-35S42/35S66 ONLY)
*	4-063-179-01	CARTON, INDIVIDUAL (KV-32S42/32S66 ONLY)
*	4-054-070-04	CUSHION, LOWER ASSY (KV-32V42 ONLY)
*	4-056-784-01	CUSHION, LOWER ASSY (KV-35S42/35S66 ONLY)
*	4-063-181-01	CUSHION, LOWER ASSY (KV-32S42/32S66 ONLY)
*	4-067-388-01	CUSHION, LOWER ASSY (KV-35V42 ONLY)
*	4-054-067-02	CUSHION, UPPER ASSY (KV-32V42 ONLY)
*	4-056-783-01	CUSHION, UPPER ASSY (KV-35S42/35S66 ONLY)
*	4-063-180-01	CUSHION, UPPER ASSY (KV-32S42/32S66 ONLY)
*	4-067-387-01	CUSHION, UPPER ASSY (KV-35V42 ONLY)
	3-866-793-21	MANUAL, INSTRUCTION (KV-32S42/32S66/32V42/35S42/35S66/35V42 ONLY)
	3-866-793-31	MANUAL, INSTRUCTION (KV-32S42CND/32S66CND/35S42CND/35S66CND ONLY)

REMOTE COMMANDER

PART NO.	DESCRIPTION
1-418-387-11	REMOTE COMMANDER (RM-Y168) (KV-32S42/32V42/35S42/35V42 ONLY)
4-978-977-01	BATTERY COVER FOR RM-Y168 (KV-32S42/32V42/35S42/35V42 ONLY)
1-418-384-11	REMOTE COMMANDER (RM-Y169) (KV-32S66/35S66 ONLY)
4-978-977-01	BATTERY COVER FOR RM-Y169 (KV-32S66/35S66 ONLY)

Sony Corporation

Sony Technology Center

Product Quality Division

Service Promotion Department

9-965-873-01

English

99GS74386-1

Printed in U.S.A.

© 1999.7